YAMAHA

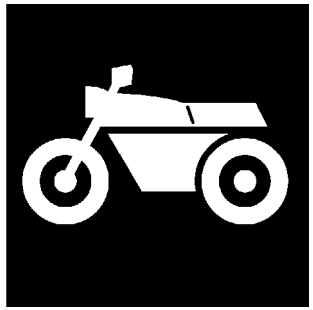

PARTS CATALOGUE
CATALOGO DE REPUESTOS

T105E (2P61) COLOMBIA

1C2P6-261S1

( )

YAMAHA GENUINE Parts & Accessories

T105E
PARTS CATALOGUE
©2004 by Yamaha Motor Co., Ltd.
1st edition, November 2004
All rights reserved.
Any reprinting or unauthorized use
without the written permission of
Yamaha Motor Co., Ltd.
is expressly prohibited.
Printed in Japan.

T105E
CATALOGO DE REPUESTOS
©2004 por Yamaha Motor Co., Ltd.
1ª edición, noviembre 2004
Todos los derechos reservados.
Toda reproducción o uso no autorizado
sin el consentimiento escrito de
Yamaha Motor Co., Ltd.
quedan expresamente prohibidos
Impreso en Japón.

FOREWORD

This Parts Catalogue is related to the parts for the model(s) on the cover page. When you are ordering replacement parts, please refer to this Parts Catalogue and quote both part numbers and part names correctly.

1. Modifications or additions which have been made after the issue of the Parts Catalogue will be announced in the Parts News.
   It is advisable that you make the necessary corrections to the Parts Catalogue according to the Parts News.

2. Abbreviations
   The following abbreviations are used in this Parts Catalogue.

   “UR” Use specified parts number.
   “UN” Use as many as needed.
   “AP” Alternate Parts
   “LM” Locally Made (Parts need to be ordered locally)
   “F#” Frame No. (Applicable machine No.)
   “O/S” Over Size

3. The number of components for assembly
   - Parts, which are to be supplied in an assembly, are listed with a dot (.) in front of the part name as shown below.
   - The numeral appearing to the right of each component part indicates the quantity of parts for each assembly unit.

PART NO.	DESCRIPTION	Q’TY	REMARKS
2F5–83310–60	FRONT FLASHER LIGHT ASSY	2	
115–83311–60	.BULB (6V–18W)	1	

4. Applicable colours of graphics are represented in the “REMARKS” as shown below.

PART NO.	DESCRIPTION	Q’TY	REMARKS
2N4–24110–00–X5	FUEL TANK COMP.	2	MXR
3J1–24240–10	.GRAPHIC, FUEL TANK	1	FOR MXR

5. Note that the illustrations for reference in finding parts numbers are not to be used for assembling. When assembling, please use the applicable service manual.

6. The asterisk (*) before a reference number indicates modified items after the first edition.

PROLOGO

Este catálogo de repuestos corresponde a las piezas para el o los modelos que figuran en la página de portada. Al formular el pedido de repuestos, se ruega citar este catálogo y especificar correctamente el número y el nombre de las piezas.

1. Las modificaciones y agregados que se hayan realizado después de la edición de este Catálogo de Repuestos, serán anunciados en las Informaciones de Recambios.
   Es recomendable que se hagan las correcciones necesarias en el Catálogo de Repuestos de acuerdo con las Informaciones de Recambios.

2. Abreviaciones
   En este. Catálogo de Repuestos se emplean las siguientes abreviaciones.

   "UR" Usar el número de partes especificado
   "UN" Usar la cantidad necesaria
   "AP" Piezas sustitutivas
   "LM" Fabricación local (Hay que pedir los repuestos en las cercanías)
   "F#" Nº de bastidor (Nº aplicable a la máquina)
   "O/S" Sobredimensionado

3. La cantidad de componentes para el montaje
   - Los componentes, suministrados como conjunto, se describen con un punto (.) que precede al nombre del parte como se indica a continuación.
   - La numeración que aparece a la derecha de cada descripción indica la cantidad de partes por cada unidad de conjunto.

CODIGO Nº	DESCRIPCION	CANT.	OBSERVACIONES
2F5–83310–60	ENSAMBLAJE DE LA LUZ	2	
115–83311–60	.BOMBILLA (6V–18W)	1	

4. Los colores de los componentes se indican como sigue en la columna de "OBSERVACIONES".

CODIGO Nº	DESCRIPCION	CANT.	OBSERVACIONES
2N4–24110–00–X5	COMP. DEL TANQUE	2	MXR
3J1–24240–10	.GRAFICO, DEL TANQUE	1	PARA MXR

5. Debe tenerse en cuenta que las ilustraciones sirven como guia para la búsqueda de los números de partes y no deben usarse para el montaje. Durante el montaje, se recomienda usar el manual de taller correspondiente.

6. EL asterisco (*) antes del número de referencia indica los elementos modificados después de la primera edición.

7. Applicable Serial No.

Frame Serial No.

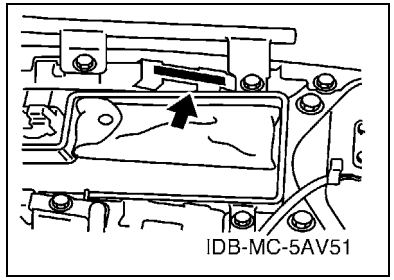

Engine Serial No.

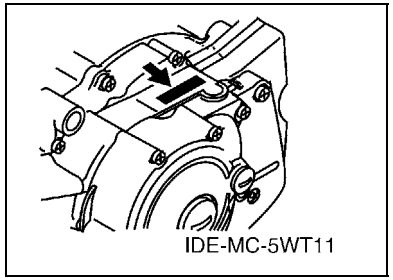

8. Applicable Colour Code (The (*) mark shows Model colour.)

Abbreviation	Colour Name	Colour Code
CIS	CIRCUIT SILVER	00WN
DPBMC(*)	DEEP PURPLISH BLUE METALLIC C	0564
VDBM3(*)	VERY DARK BLUE METALLIC 3	0266
VRC7(*)	VIVID RED COCKTAIL 7	0580

9. Applicable Starting Serial No.

Frame Serial No.

Serial No.	Name Of Q'ty Column	Model Code

Engine Serial No.

Serial No.	Name Of Q'ty Column	Model Code

7. Números de serie

Nº de Serie del bastidor

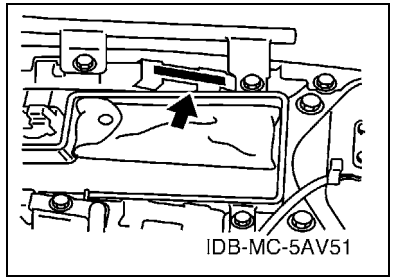

Nº de Serie del motor

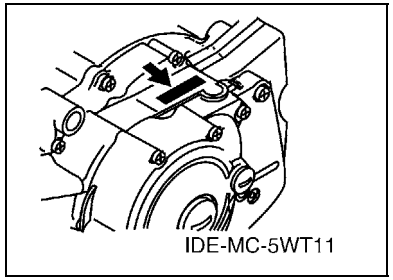

8. Códigos de color aplicables (El símbolo (*) muestra el color de modelo.)

Abreviatura	Nombre de color	Código de color
CIS	CIRCUIT SILVER	00WN
DPBMC(*)	DEEP PURPLISH BLUE METALLIC C	0564
VDBM3(*)	VERY DARK BLUE METALLIC 3	0266
VRC7(*)	VIVID RED COCKTAIL 7	0580

9. Nº de serie inicial aplicable

Nº de Serie del bastidor

Nº de serie	Nombre de la columna de cantidades	Código de Modelo

Nº de Serie del motor

Nº de serie	Nombre de la columna de cantidades	Código de Modelo

CONTENTS

ENGINE

CYLINDER HEAD 1
CRANKSHAFT & PISTON 2
VALVE 3
CAMSHAFT & CHAIN 4
OIL PUMP 5
INTAKE 6
CARBURETOR 7
EXHAUST 8
CRANKCASE 9
CRANKCASE COVER 1 10
STARTER 11
STARTER CLUTCH 12
CLUTCH 13
TRANSMISSION 14
SHIFT CAM & FORK 15
SHIFT SHAFT 16

CHASSIS

FRAME 17
FENDER 18
SIDE COVER 19
REAR ARM & SUSPENSION 21
STEERING 22
FRONT FORK 24
FUEL TANK 26
SEAT 27
FRONT WHEEL 28
REAR WHEEL 30
STEERING HANDLE & CABLE 32
STAND & FOOTREST 34
LEG SHIELD 36
GENERATOR 38
STARTING MOTOR 39
FLASHER LIGHT 40
METER 41
HEADLIGHT 42
TAILLIGHT 43
HANDLE SWITCH & LEVER 44
ELECTRICAL 1 45
ELECTRICAL 2 46

INDEX

NUMERICAL INDEX 47

CONTENIDO

MOTOR

CULATA DE CILINDRO 1
CIGUENAL & PISTON 2
VALVULA 3
ARBOL DE LEVAS & CADENA 4
BOMBA DE ACEITE 5
ADMISION 6
CARBURADOR 7
DESCARGA 8
CARTER 9
CUBIERTA DE CARTER 1 10
ARRANQUE 11
EMBRAGUE DEL ARRANQUE 12
EMBRAGUE 13
TRANSMISION 14
LEVA DE CAMBIO & HORQUILLA 15
EJE DE CAMBIO & PEDAL 16

SHASIS

CUADRO 17
GUARDABARRO 18
CUBIERTA LATERAL 19
BRAZO TRASERO & SUSPENSION 21
DIRECCION 22
HORQUILLA DELANTERA 24
DEPOSITO DE COMBUSTIBLE 26
ASIENTO 27
RUEDA DELANTERA 28
RUEDA TRASERA 30
MANILLAR & CABLE 32
SOPORTE & APOYAPIE 34
PATA PROTEGIDA 36
GENERADOR 38
MOTOR DE ARRANQUE 39
LUZ DE DESTELLADOR 40
MEDIDOR 41
FARO DELANTERO 42
LUZ DE COLA 43
INTERRUPTOR DE MANILLAR&PALANC 44
EQUIPO ELECTRICO 1 45
EQUIPO ELECTRICO 2 46

INDICE

INDICE NUMERICO 47

FIG. 1 CYLINDER HEAD — CULATA DE CILINDRO

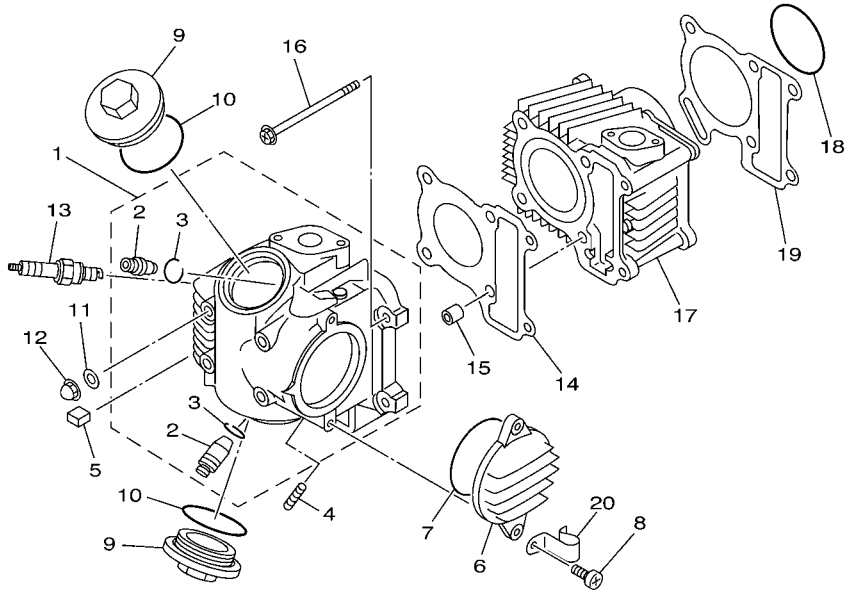

5AV4450-A010

REF. NO.	PART NO. CODIGO Nº	DESCRIPTION DESCRIPCION	2P61					REMARKS OBSERVACIONES
1	5AV–E1102–01	CYLINDER HEAD ASSY CULATA DE CILINDRO COMPLETA	1					
2	5AV–E1134–00	.GUIDE, VALVE 2 .GUIA DE VALVULA 2	2					
3	93440–10153	.CIRCLIP .SEGURO	2					
4	5AV–E4651–00	BOLT PERNO	2					
5	5AV–E1161–00	ABSORBER 1 AMORTIGUADOR 1	8					
6	5AV–E1185–00	COVER, CYLINDER HEAD SIDE 1 CUBIERTA CULATA CIL.LAT.1	1					
7	93210–63556	O-RING ANILLO O	1					
8	98507–06016	SCREW, PAN HEAD TORNILLO DE CABEZA CON PLANA	2					
9	5AV–E1186–00	COVER, CYLINDER HEAD SIDE 2 CUBIERTA CULATA CIL.LAT.2	2					
10	93210–44704	O-RING ANILLO O	2					
11	90201–08609	WASHER, PLATE ARANDELA PLANA	4					
12	90176–08026	NUT, CROWN TUERCA CORONA	4					
13	94700–00846	PLUG, SPARK (NGK CR7HSA) BUJIA (NGK CR7HSA)	1					
14	5AV–E1181–00	GASKET, CYLINDER HEAD 1 JUNTA, DE CULATA 1	1					
15	99530–10114	PIN, DOWEL PASADOR, DE ESPIGA	2					
16	95027–06090	BOLT, FLANGE PERNO, DE BRIDA	2					
17	5AV–E1311–00	CYLINDER 1 CILINDRO 1	1					
18	93210–568G8	O-RING ANILLO O	1					
19	5AV–E1351–01	GASKET, CYLINDER JUNTA, DE CILINDRO	1					
20	90465–08230	CLAMP BRIDA	1					

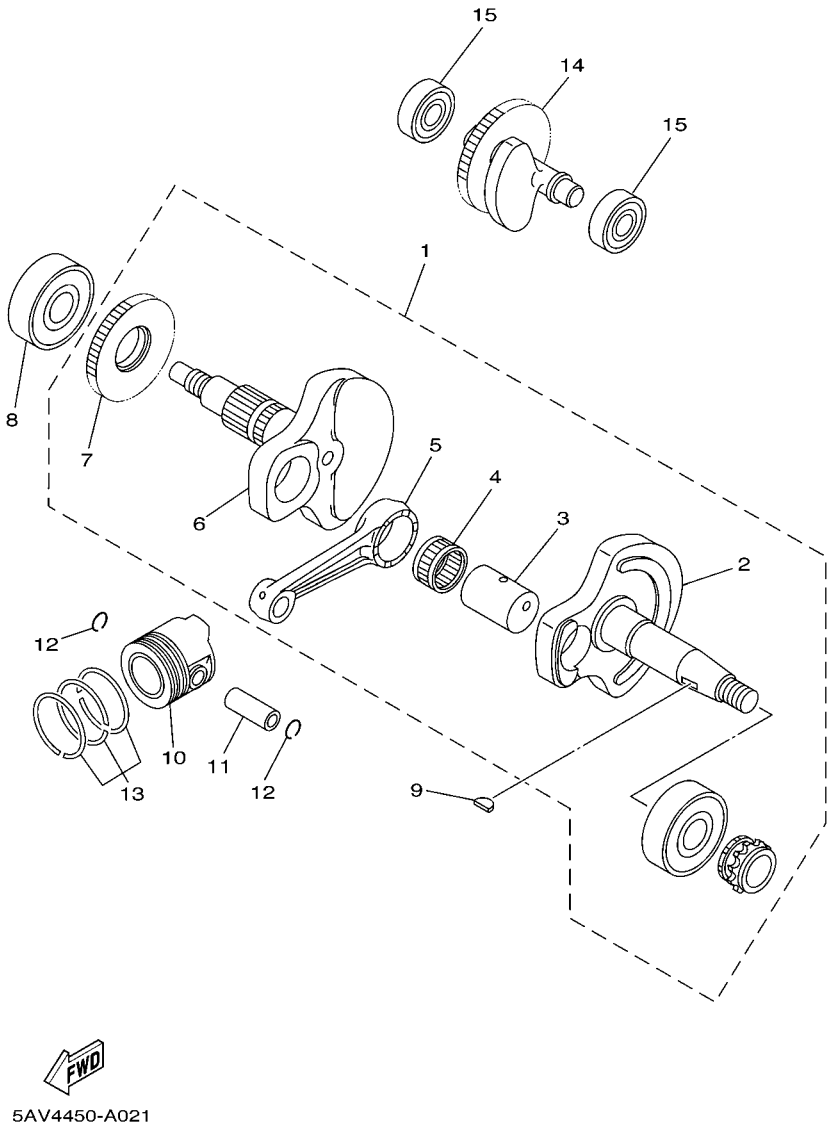

FIG. 2 CRANKSHAFT & PISTON CIGUENAL & PISTON

REF. NO.	PART NO. CODIGO Nº	DESCRIPTION DESCRIPCION	2P61					REMARKS OBSERVACIONES
1	5AV–E1400–20	CRANKSHAFT ASSY CIGUENAL COMPLETO	1					
2	5AV–E1412–00	.CRANK 1 .MANIVELA 1	1					
3	5AV–E1681–00	.PIN, CRANK 1 .PASADOR MANIVELA 1	1					
4	93310–326M9	.BEARING .COJINETE DE RODILLOS	1					
5	5AV–E1651–00	.ROD, CONNECTING .BIELA	1					
6	5AV–E1422–00	.CRANK 2 .MANIVELA 2	1					
7	5AV–E1536–00	.GEAR, DRIVE .ENGRANAJE TRACCION	1					
8	93306–20595	BEARING COJINETE	1					
9	90280–03017	KEY, WOODRUFF CUNA WOODRUFF	1					
10	5AV–E1631–01	PISTON (STD) PISTON (NORMA)	1					
11	5AV–E1633–00	PIN, PISTON PASADOR, PISTON	1					
12	93450–14088	CIRCLIP SEGURO	2					
13	5AV–E1610–00	PISTON RING SET (STD) JUEGO DE AROS (NORMA)	1					
14	5AV–E1500–00	BALANCER ASSY COMPENSADOR COMPLETA	1					
15	93306–20229	BEARING COJINETE	2					

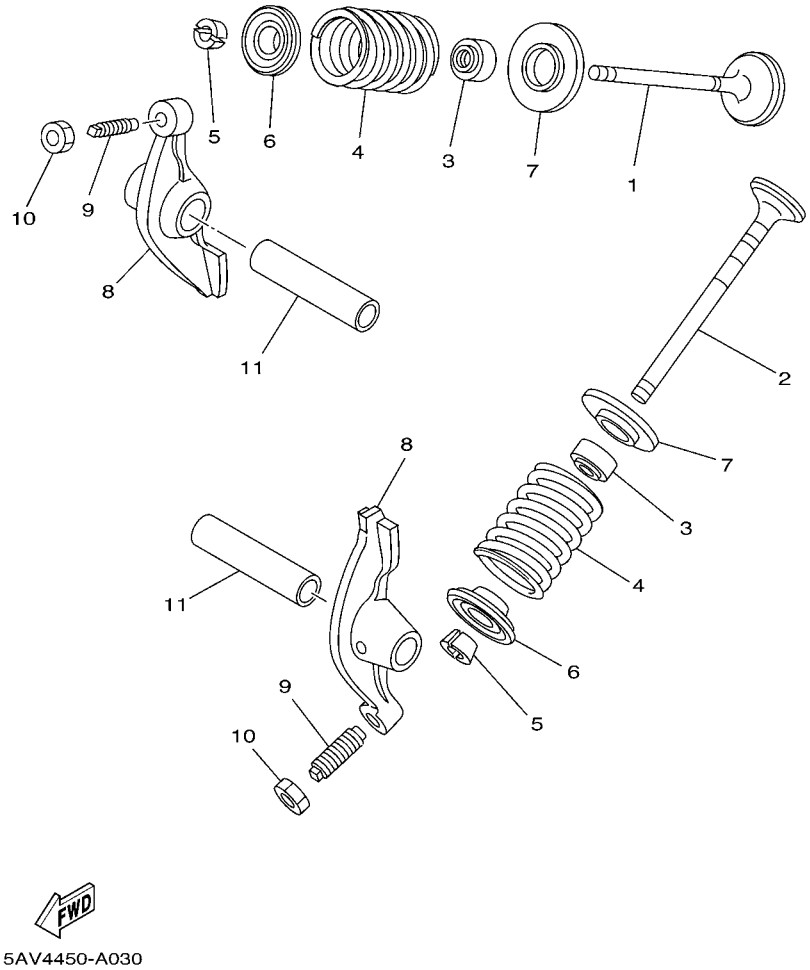

FIG. 3 VALVE VALVULA

REF. NO.	PART NO. CODIGO Nº	DESCRIPTION DESCRIPCION	2P61					REMARKS OBSERVACIONES
1	5AV–E2111–00	VALVE, INTAKE VALVULA DE ADMISION	1					
2	5AV–E2121–00	VALVE, EXHAUST VALVULA DE ESCAPE	1					
3	4SV–12119–00	SEAL, VALVE STEM SELLO DE ACEITE VALVULA	2					
4	5AV–E2114–00	SPRING, VALVE OUTER RESORTE VALVULA EXTERIOR	2					
5	5AV–E2118–00	COTTER, VALVE SEGURO DE VALVULA	4					
6	5AV–E2117–00	RETAINER, VALVE SPRING RETEN RESORTE DE VALVULA	2					
7	5AV–E2126–00	SEAT, VALVE SPRING 2 ASIENTO RESORTE DE VALVULA2	2					
8	5AV–E2151–00	ARM, VALVE ROCKER BRAZO DE BALANCIN DE VALVULA	2					
9	5AV–E2159–00	SCREW, VALVE ADJUSTING TORNILLO DE AJUSTE DE VALVULA	2					
10	90170–05302	NUT TUERCA	2					
11	5AV–E2156–00	SHAFT, ROCKER 2 EJE DE BALANCIN	2					

FIG. 4 CAMSHAFT & CHAIN ARBOL DE LEVAS & CADENA

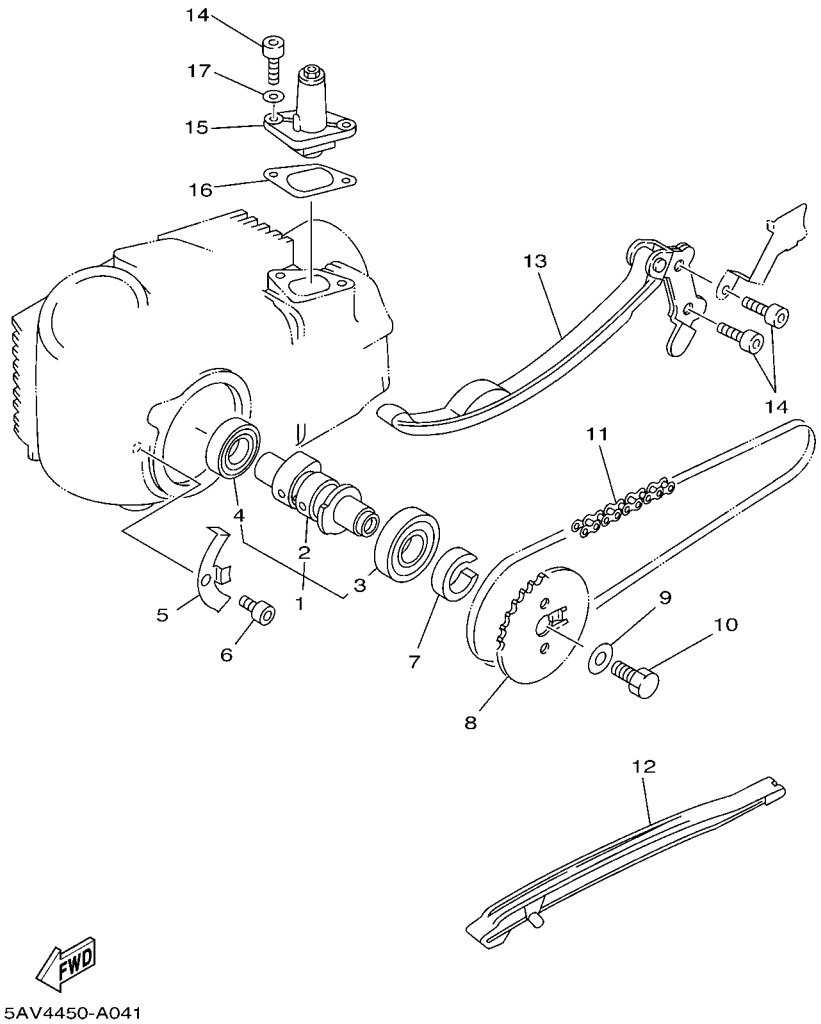

REF. NO.	PART NO. CODIGO Nº	DESCRIPTION DESCRIPCION	2P61					REMARKS OBSERVACIONES
1	5AV–E2170–00	CAMSHAFT ASSY 1 ARBOL DE LEVAS COMPLETO 1	1					
2	5AV–E2171–00	.CAMSHAFT 1 .ARBOL DE LEVAS 1	1					
3	93306–00308	.BEARING .COJINETE	1					
4	93306–00210	.BEARING .COJINETE	1					
5	5AV–E111F–00	PLATE PLACA	1					
6	91317–06012	BOLT PERNO	1					
7	90387–167L5	COLLAR ESPACIADOR	1					
8	5AV–E2176–00	SPROCKET, CAM CHAIN CATALINA DE CADENA	1					
9	90201–08326	WASHER, PLATE ARANDELA PLANA	1					
10	90101–08590	BOLT TORNILLO	1					
11	5AV–E2190–00	CHAIN ASSY CADENA	1					
12	5AV–E2231–00	GUIDE, STOPPER 1 TOPE DE GUIA 1	1					
13	5AV–E2241–00	GUIDE, STOPPER 2 TOPE DE GUIA 2	1					
14	91317–06016	BOLT PERNO	4					
15	5AV–E2210–00	TENSIONER ASSY, CAM CHAIN TENSOR CADENA DE LEVA	1					
16	5AV–E2213–00	GASKET, TENSIONER CASE EMPAQUE DE CAJA TENSOR	1					
17	90430–06014	GASKET JUNTA	2					

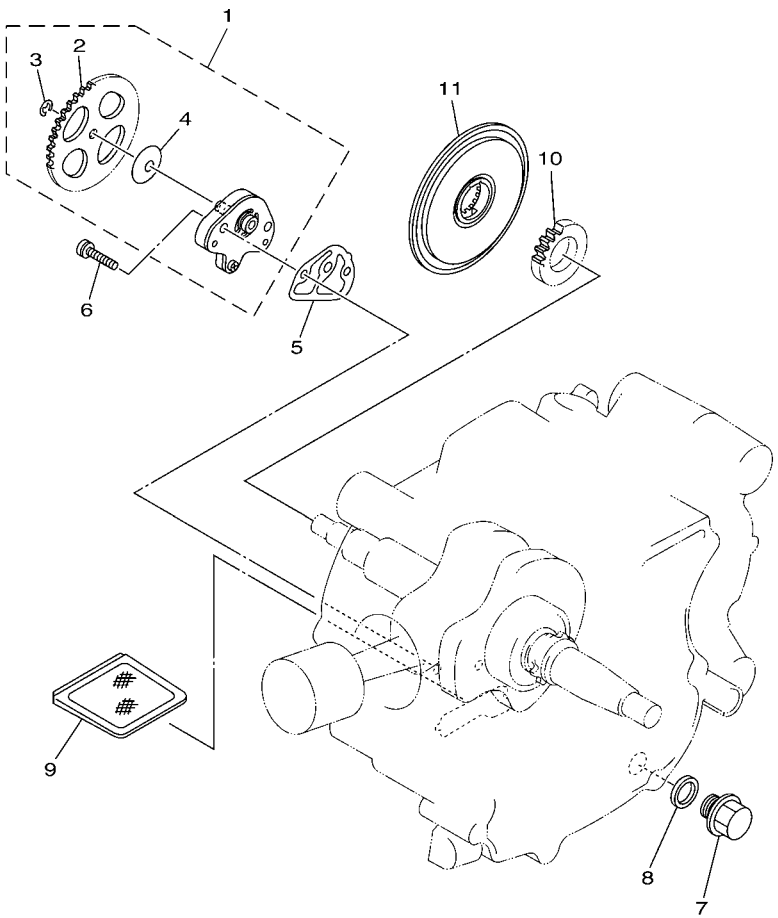

5ER5460-B050

FIG. 5 OIL PUMP — BOMBA DE ACEITE

REF. NO.	PART NO. CODIGO Nº	DESCRIPTION DESCRIPCION	2P61					REMARKS OBSERVACIONES
1	5AV–E3300–00	OIL PUMP ASSY BOMBA DE ACEITE COMPLETA	1					
2	5AV–E3325–00	.GEAR, PUMP DRIVEN .ENGRANAJE IMPULSOR DE BOMBA	1					
3	99001–05600	.CIRCLIP .PRESILLA REDONDA	1					
4	90208–07052	.WASHER, CONICAL SPRING .ARANDELA DE RESORTE CONICO	1					
5	5AV–E3329–00	GASKET, PUMP COVER EMPAQUE TAPA DE BOMBA	1					
6	90155–06007	SCREW, FLAT FILLISTER TORNILLO CABEZA PLANA RAN.	2					
7	90340–12059	PLUG, STRAIGHT SCREW TORNILLO, DE DRENAJE	1					
8	5AV–E1198–00	GASKET EMPAQUE	1					
9	5AV–E3411–00	STRAINER, OIL FILTRO DE ACEITE	1					
10	5AV–E3324–00	GEAR, PUMP DRIVE ENGRANAJE TRACC. DE BOMBA	1					
11	5AV–E3451–00	FILTER,ROTARY FILTRE ROTATIVO	1					

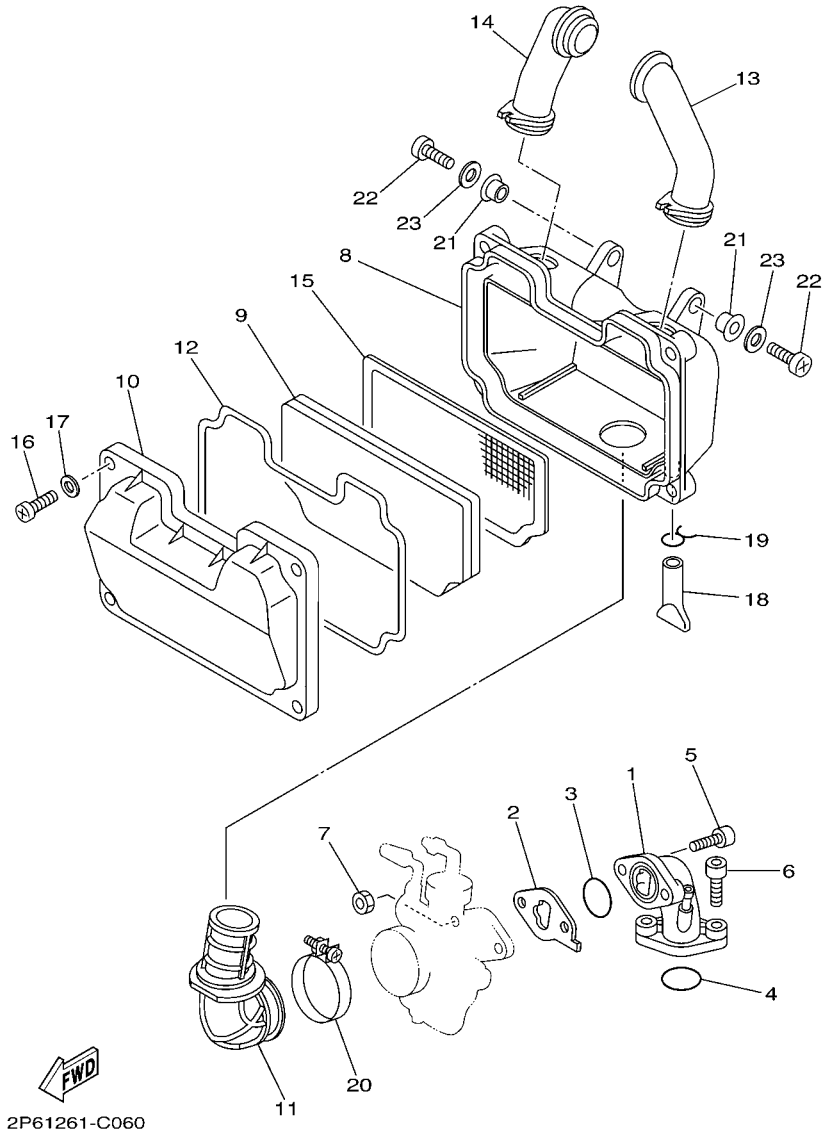

FIG. 6 INTAKE — ADMISION

REF. NO.	PART NO. CODIGO Nº	DESCRIPTION DESCRIPCION	2P61					REMARKS OBSERVACIONES
1	5AV–E3586–01	JOINT, CARBURETOR 1 TOBERA DE CARBURADOR 1	1					
2	5AV–E3595–01	JOINT TOBERA	1					
3	93210–25552	O-RING ANILLO O	1					
4	93210–25552	O-RING ANILLO O	1					
5	91317–06025	BOLT PERNO	2					
6	91317–06025	BOLT PERNO	2					
7	95317–06700	NUT TUERCA	2					
8	5AV–E4411–00	CASE, AIR CLEANER 1 CAJA FILTRO DEL AIRE 1	1					
9	5AV–E4451–00	ELEMENT, AIR CLEANER ELEMENTO DEL FILTRO DEL AIRE	1					
10	5AV–E4412–00	CAP, CLEANER CASE 1 TAPA CAJA DEL FILTRO 1	1					
11	5AV–E4453–00	JOINT, AIR CLEANER 1 UNION DEL FILTRO DEL AIRE 1	1					
12	5AV–E4452–00	SEAL SELLO	1					
13	5AV–E4423–00	PIPE, SUCTION 1 TUBO DE SUCCION 1	1					
14	5AV–E4433–00	PIPE, SUCTION 2 TUBO DE SUCCION 2	1					
15	5AV–E4472–00	PLATE, ELEMENT PLACA DE ELEMENTO	1					
16	98507–05030	SCREW, PAN HEAD TORNILLO DE CABEZA PLANA	4					
17	92907–05600	WASHER, PLATE ARANDELA	4					
18	5AV–E443E–00	PIPE, DRAIN TUBO, DRENAJE	1					
19	90467–11106	CLIP PRESILLA	1					
20	90460–43179	CLAMP, HOSE BRIDA, DE UNION	1					
21	90387–06803	COLLAR ESPACIADOR	2					
22	98507–06020	SCREW, PAN HEAD TORNILLO DE CABEZA CON PLANA	2					
23	92907–06600	WASHER, PLATE ARANDELA	2					

FIG. 7 CARBURETOR CARBURADOR

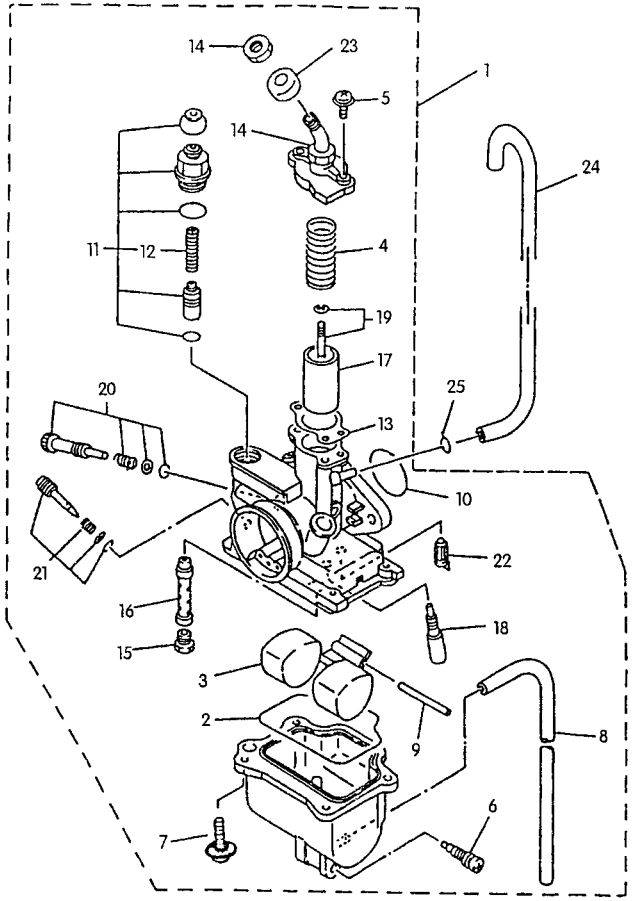

5AV4450-A070

REF. NO.	PART NO. CODIGO Nº	DESCRIPTION DESCRIPCION	2P61					REMARKS OBSERVACIONES
1	2P6–E4301–00	CARBURETOR ASSY 1 CARBURADOR COMPLETO 1	1					
2	5AV–E4384–00	.GASKET, FLOAT CHAMBER .EMPAQUE DE CAMARA DE BOIA	1					
3	5AV–E4385–00	.FLOAT .BOIA	1					
4	5AV–E4331–00	.SPRING, THROTTLE VALVE .RESORTE VALVULA ACELERADOR	1					
5	97601–04012	.SCREW, PAN HEAD WITH WASHER .TORNILLO CON RONDONA	2					
6	5AV–E4323–00	.SCREW, AIR ADJUSTING .TORNILLO DE AJUSTE DE AIRE	1					
7	97601–04014	.SCREW, PAN HEAD WITH WASHER .TORNILLO CON RONDONA	4					
8	4FP–E4349–00	.PIPE .TUBO	1					
9	6E5–E4386–01	.PIN, FLOAT .PASADOR DE BOIA	1					
10	214–E4513–00	.O-RING .ANILLO O	1					
11	5AV–E410A–00	.STARTER SET .JUEGO DE ARRANQUE	1					
12	5AV–E4335–00	..SPRING, PLUNGER ..RESORTE DE EMBOLO	1					
13	4JP–E4561–00	.GASKET .EMPAQUE	1					
14	5AV–E4594–00	.NUT .TUERCA	2					
15	14T–E4343–45	.JET, MAIN (#90) .SURTIDOR, PRINCIPAL (#90)	1					
16	5AV–E4341–00	.NOZZLE, MAIN .BOQUILLA PRINCIPAL	1					
17	5AV–E4312–25	.VALVE, THROTTLE 1 .VALVULA DE OBTURADOR 1	1					
18	5AV–E4342–00	.JET, PILOT (#40) .ESPREA DE PILOTO (#40)	1					
19	5AV–E490J–00	.NEEDLE SET .CJTO. AGUJA	1					
20	5AV–E4103–00	.THROTTLE SCREW SET .CJTO. TORNILLO DEL RALENTI	1					
21	5AV–E4104–00	.AIR SCREW SET .CJTO. TORNNILLO DE AIRE	1					
22	5AV–E4390–00	.NEEDLE VALVE ASSY .VALVULA DE AGUJA COMPLETA	1					
23	5AV–E4118–00	.CAP .TAPA	1					
24	5AV–E4197–00	PIPE TUBO RESPIRADERO	1					
25	90467–07029	CLIP PRESILLA	1					

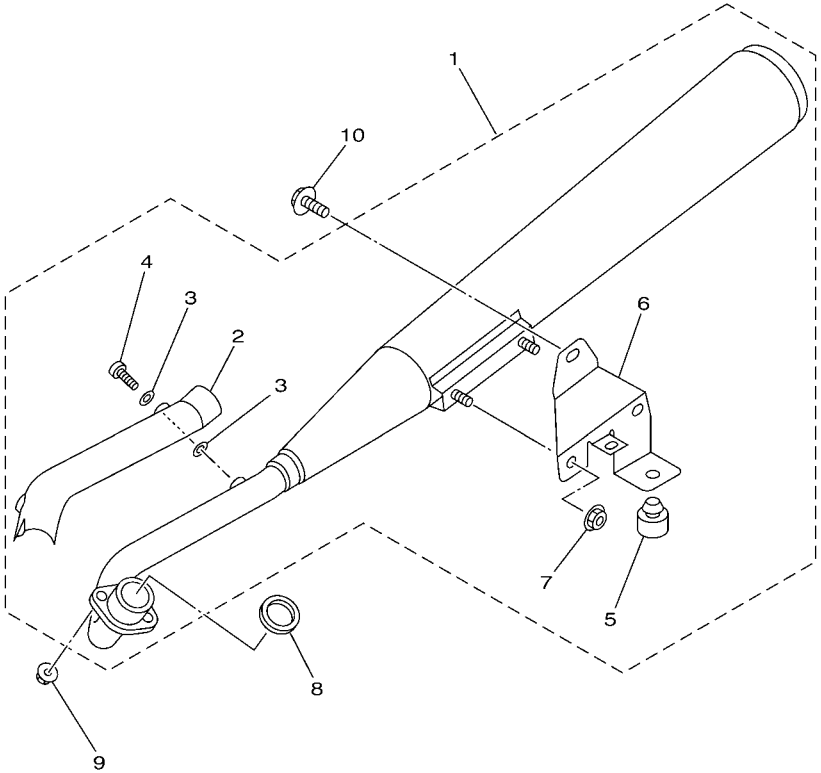

5AV4450-A081

FIG. 8 EXHAUST DESCARGA

REF. NO.	PART NO. CODIGO Nº	DESCRIPTION DESCRIPCION	2P61					REMARKS OBSERVACIONES
1	5AV–E4610–00	EXHAUST PIPE ASSY 1 TUBO DE ESCAPE COMPLETO 1	1					
2	5AV–E4628–00	.PROTECTOR, EXHAUST PIPE .PROTECTOR DE TUBO DE ESCAPE	1					
3	5AV–E4766–00	.WASHER, PROTECTOR .ARANDELA DE PROTECTOR	4					
4	98980–06008	.SCREW, BIND .TORNILLO DE LIGAR	2					
5	5AV–F7114–00	.STOPPER, MAIN STAND .TOPE DE PUNTAL PRINCIPAL	1					
6	5AV–E4781–00	.STAY, MUFFLER 2 .SOPORTE DE ESCAPE	1					
7	95707–08500	.NUT, FLANGE .TUERCA DE BRIDA	2					
8	5AV–E4613–00	GASKET, EXHAUST PIPE JUNTA, TUBO DE ESCAPE	1					
9	95707–06500	NUT, FLANGE TUERCA DE BRIDA	2					
10	95807–08016	BOLT, FLANGE TUERCA DE REBORDE	1					

FIG. 9 CRANKCASE CARTER

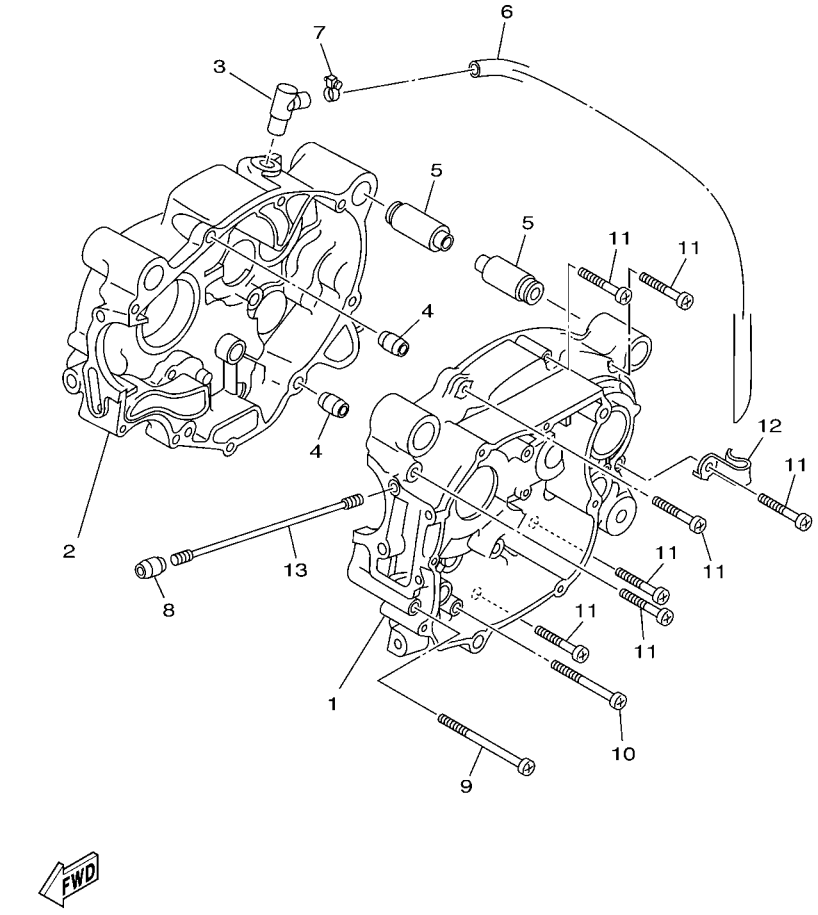

REF. NO.	PART NO. CODIGO Nº	DESCRIPTION DESCRIPCION	2P61					REMARKS OBSERVACIONES
1	5AV–E5111–00	CRANKCASE 1 CARTER MANIVELA 1	1					
2	5AV–E5121–00	CRANKCASE 2 CARTER MANIVELA 2	1					
3	5AV–E5371–00	BREATHER RESPIRADERO	1					
4	99530–10114	PIN, DOWEL PASADOR, DE ESPIGA	4					
5	5AV–E5316–00	DAMPER, ENGINE MOUNT 1 AMORT. MONTANTE MOTOR 1	4					
6	5AV–E1166–00	PIPE, BREATHER 1 TUBO RESPIRADERO 1	1					
7	90467–13064	CLIP PRESILLA	1					
8	99530–10114	PIN, DOWEL PASADOR, DE ESPIGA	2					
9	98507–06080	SCREW, PAN HEAD TORNILLO DE CABEZA PLANA	1					
10	98507–06060	SCREW, PAN HEAD TORNILLO DE CABEZA PLANA	1					
11	98507–06040	SCREW, PAN HEAD TORNILLO DE CABEZA CON PLANA	7					
12	90465–10833	CLAMP BRIDA	1					
13	90116–08597	BOLT, STUD ESPARRAGO	4					

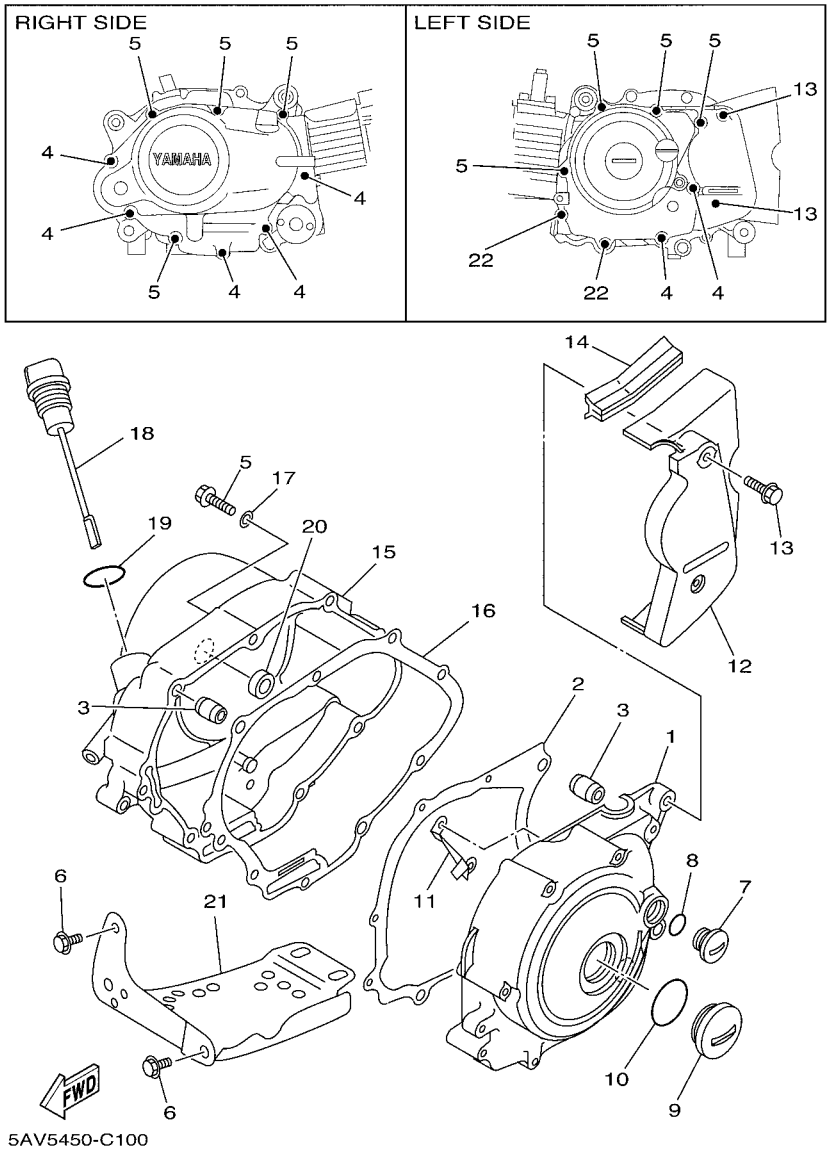

FIG. 10 CRANKCASE COVER 1 CUBIERTA DE CARTER 1

REF. NO.	PART NO. CODIGO Nº	DESCRIPTION DESCRIPCION	2P61					REMARKS OBSERVACIONES
1	5AV–E5411–00	COVER, CRANKCASE 1 CUBIERTA DE CARTER 1	1					
2	5AV–E5451–10	GASKET, CRANKCASE COVER 1 EMPAQ DE CUBIERTA DE CARTER	1					
3	99530–10114	PIN, DOWEL PASADOR, DE ESPIGA	4					
4	95027–06040	BOLT, FLANGE PERNO, DE BRIDA	7					
5	95027–06050	BOLT, FLANGE PERNO, DE BRIDA	8					
6	95827–08016	BOLT, FLANGE TUERCA DE REBORDE	2					
7	90340–14810	PLUG, STRAIGHT SCREW TORNILLO, DE DRENAJE	1					
8	93210–14369	O-RING ANILLO O	1					
9	90340–32812	PLUG, STRAIGHT SCREW TORNILLO, DE DRENAJE	1					
10	93210–32172	O-RING ANILLO O	1					
11	5AV–E5113–00	PLATE PLACA	1					
12	5AV–E5418–00	COVER, CHAIN CASE CUBIERTA CAJA DE CADENA	1					
13	95027–06025	BOLT, FLANGE PERNO, DE BRIDA	2					
14	5AV–E5492–00	COVER CUBIERTA	1					
15	5AV–E5421–10	COVER, CRANKCASE 2 TAPA DE CARTER DERECHA	1					
16	5AV–E5461–00	GASKET, CRANKCASE COVER 2 JUNTA TAPA CARTER DRCHO	1					
17	90430–06014	GASKET JUNTA	1					
18	5AV–E5362–00	PLUG, OIL LEVEL TAPON DEL NIVEL DE ACEITE	1					
19	93210–19522	O-RING ANILLO O	1					
20	93101–10142	OIL SEAL SELLO ACEITE	2					
21	5AV–E5436–00	COVER, STARTING MOTOR CUBIERTA DE MOTOR DE ARRANQUE	1					
22	95027–06080	BOLT, FLANGE PERNO, DE BRIDA	2					

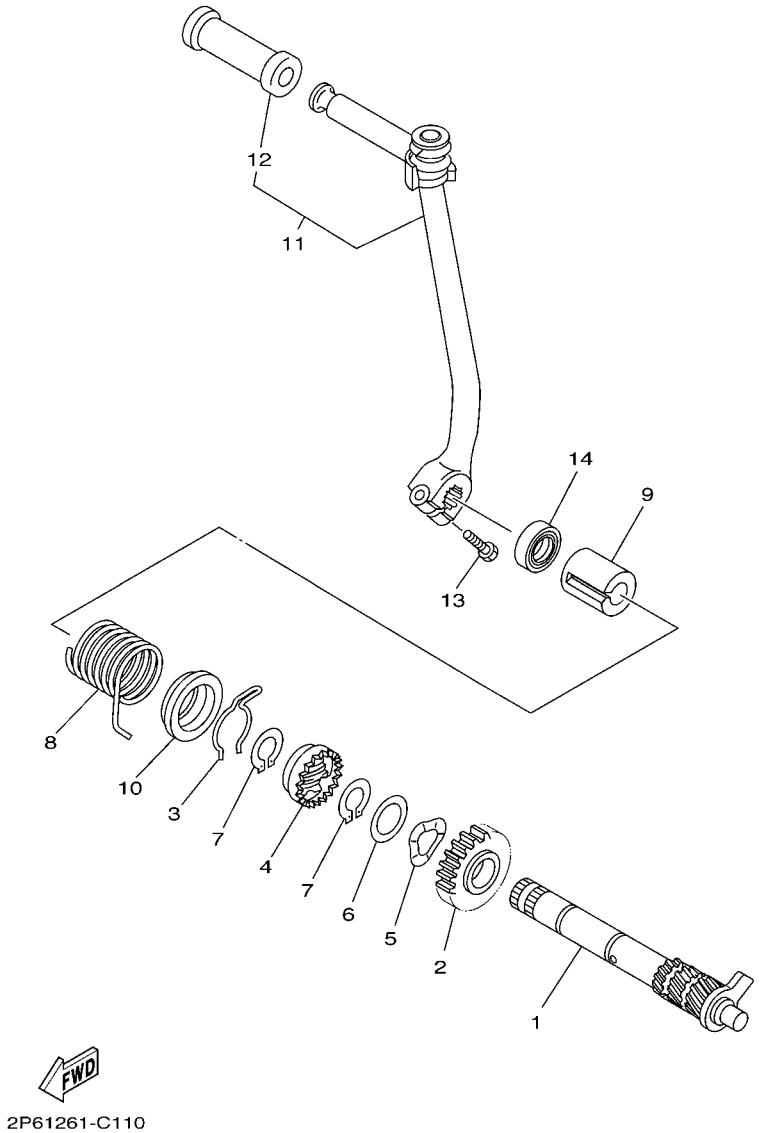

FIG. 11 STARTER ARRANQUE

REF. NO.	PART NO. CODIGO Nº	DESCRIPTION DESCRIPCION	2P61					REMARKS OBSERVACIONES
1	5AV–E5660–10	KICK AXLE ASSY EJE DEL PEDAL DE ARRAN.COMPLET	1					
2	5AV–E5641–00	GEAR, KICK ENGRANAJE PEDAL ARRANQUE	1					
3	90468–23194	CLIP PRESILLA	1					
4	5AV–E5671–00	WHEEL, RATCHET RUEDA DE TRINQUETE	1					
5	90206–19027	WASHER, WAVE ARANDELA ONDULADA	1					
6	5AV–E5644–00	SHIM CUNA	1					
7	99009–19400	CIRCLIP PRESILLA REDONDA	2					
8	90508–263A8	SPRING, TORSION RESORTE DE TORSION	1					
9	5AV–E5664–10	GUIDE, SPRING GUIA DE RESORTE	1					
10	5AV–E5664–00	GUIDE, SPRING GUIA DE RESORTE	1					
11	5AV–E5620–00	KICK CRANK ASSY MANIVELA DE PEDAL COMPLETA	1					
12	5AV–E5618–00	.COVER, KICK LEVER .GOMA PROTECTORA, PEDAL	1					
13	97017–06025	BOLT PERNO	1					
14	93102–15147	OIL SEAL SELLO ACEITE	1					

FIG. 12 STARTER CLUTCH EMBRAGUE DEL ARRANQUE

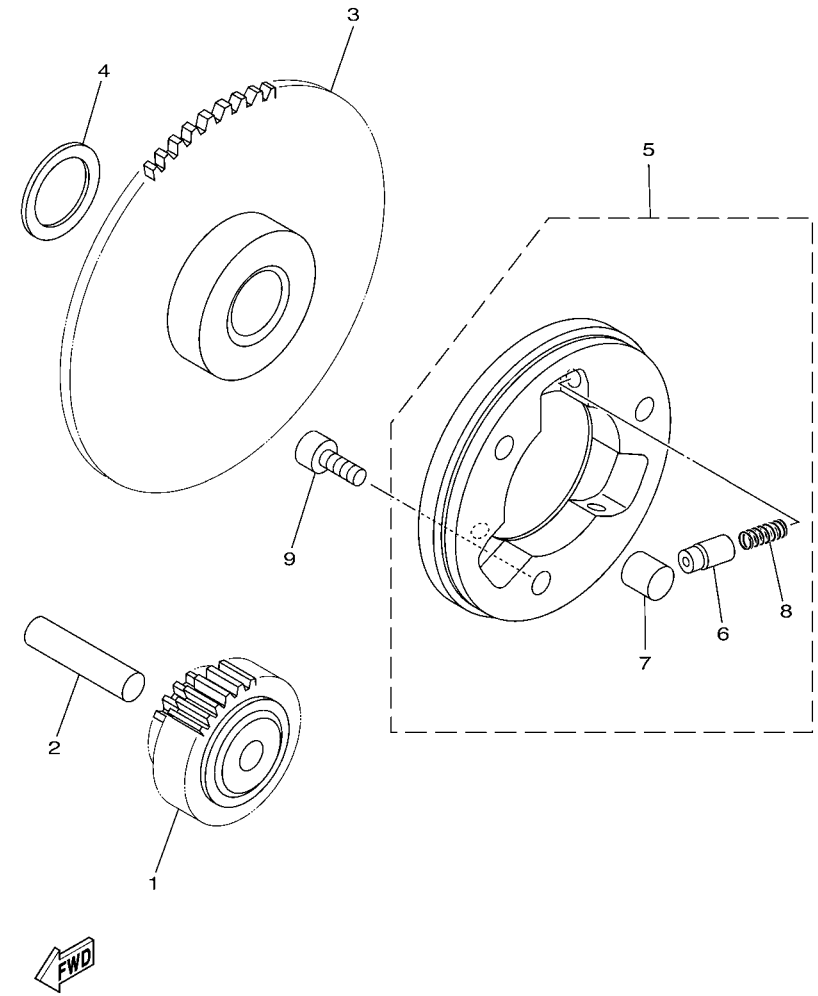

REF. NO.	PART NO. CODIGO Nº	DESCRIPTION DESCRIPCION	2P61					REMARKS OBSERVACIONES
1	5AV–E5512–00	GEAR, IDLER 1 ENGRENAJE NEUTRO	1					
2	93608–43157	PIN, DOWEL PASADOR DE CLAVIJA	1					
3	5AV–E5524–00	WHEEL, STARTER RUEDA DE ARRANQUE	1					
4	5AV–E5644–00	SHIM CUNA	1					
5	5AV–E5580–20	STARTER CLUTCH OUTER ASSY ENSAMBLE EXT.EMBRAGUE ARRANQUE	1					
6	5AV–E5583–00	.CAP, STARTER CLUTCH SPRING .TAPA RESORTE EMBRAG.ARRANQ.	3					
7	93610–10170	.PIN, DOWEL .PASADOR DE CLAVIJA	3					
8	90501–02639	.SPRING, COMPRESSION .RESORTE DE COMPRESION	3					
9	91317–06010	BOLT PERNO	3					

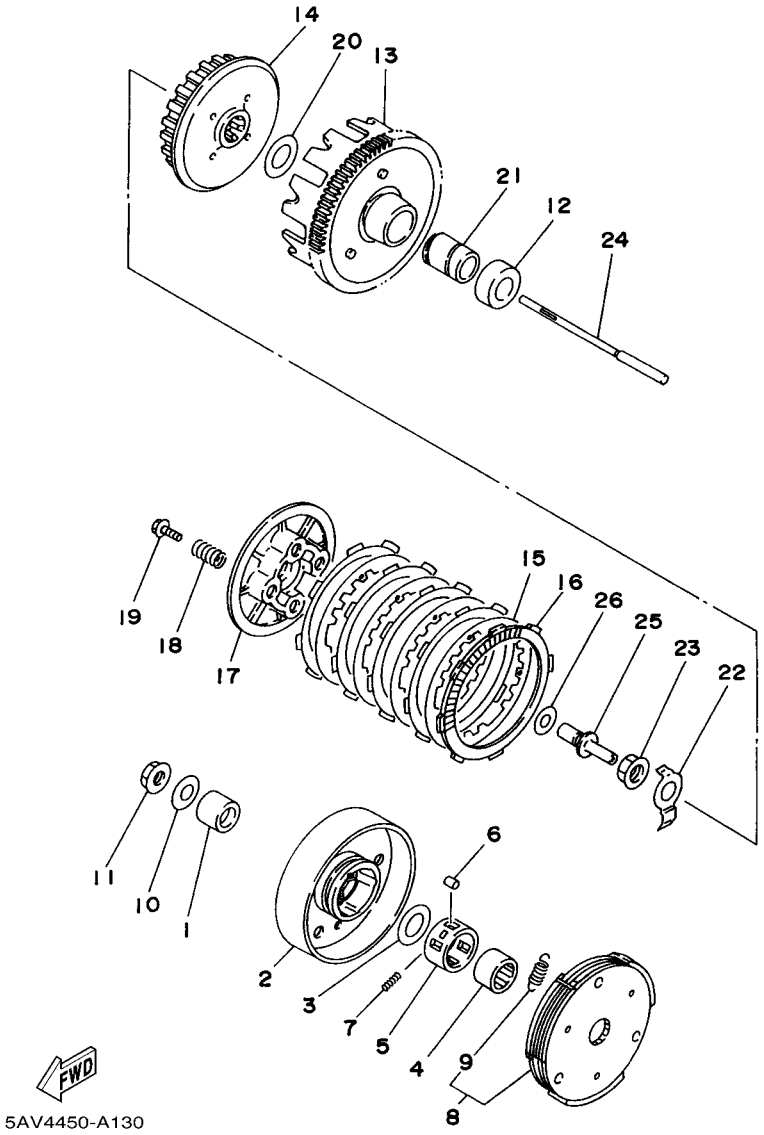

FIG. 13 CLUTCH EMBRAGUE

REF. NO.	PART NO. CODIGO Nº	DESCRIPTION DESCRIPCION	2P61					REMARKS OBSERVACIONES
1	90560–16385	SPACER SEPARADOR	1					
2	4ST–16611–00	CLUTCH HOUSING COMP. CAJA DE EMBRAGUE COMPLETO	1					
3	90201–167P7	WASHER, PLATE ARANDELA PLANA	1					
4	5AV–E6512–00	BOSS, CLUTCH HOUSING COPA DE CAJA DE EMBRAGUE	1					
5	4ST–16586–00	CAGE MEDITOR	1					
6	93606–10227	PIN, DOWEL PASADOR DE CLAVIJA	3					
7	90501–037J6	SPRING, COMPRESSION RESORTE DE COMPRESION	1					
8	5AV–E6620–00	CLUTCH CARRIER ASSY PORTADOR DE EMBRAGUE COMPLETO	1					
9	5AV–E6626–00	.SPRING, CLUTCH WEIGHT 1 .RESORTE CONTRAPESO EMBRAGUE	3					
10	90201–122H1	WASHER, PLATE ARANDELA PLANA	1					
11	90179–12659	NUT TUERCA	1					
12	90560–17384	SPACER SEPARADOR	1					
13	5AV–E6150–00	PRIMARY DRIVEN GEAR COMP. CAMPANA DE EMBRAGUE	1					
14	5AV–E6371–00	BOSS, CLUTCH CUBO, DE EMBRAGUE	1					
15	2JG–16324–00	PLATE, CLUTCH 1 PLACA DE EMBRAGUE	4					
16	5AV–E6321–00	PLATE, FRICTION PLACA DE FRICCION	5					
17	5AV–E6351–00	PLATE, PRESSURE 1 PLATO DE PRESION	1					
18	90501–217J8	SPRING, COMPRESSION RESORTE DE COMPRESION	4					
19	90119–05001	BOLT, WITH WASHER TORNILLO CON ARANDELA	4					
20	90201–174L9	WASHER, PLATE ARANDELA PLANA	1					
21	90560–17328	SPACER SEPARADOR	1					
22	90215–14321	WASHER, LOCK ARANDELA DE CIERRE	1					
23	90179–14469	NUT TUERCA	1					
24	5AV–E6357–00	ROD, PUSH 2 VARILLA DE EMPUJE 2	1					
25	5AV–E6356–00	ROD, PUSH 1 VARILLA DE EMPUJE 1	1					
26	90201–10591	WASHER, PLATE ARANDELA PLANA	1					

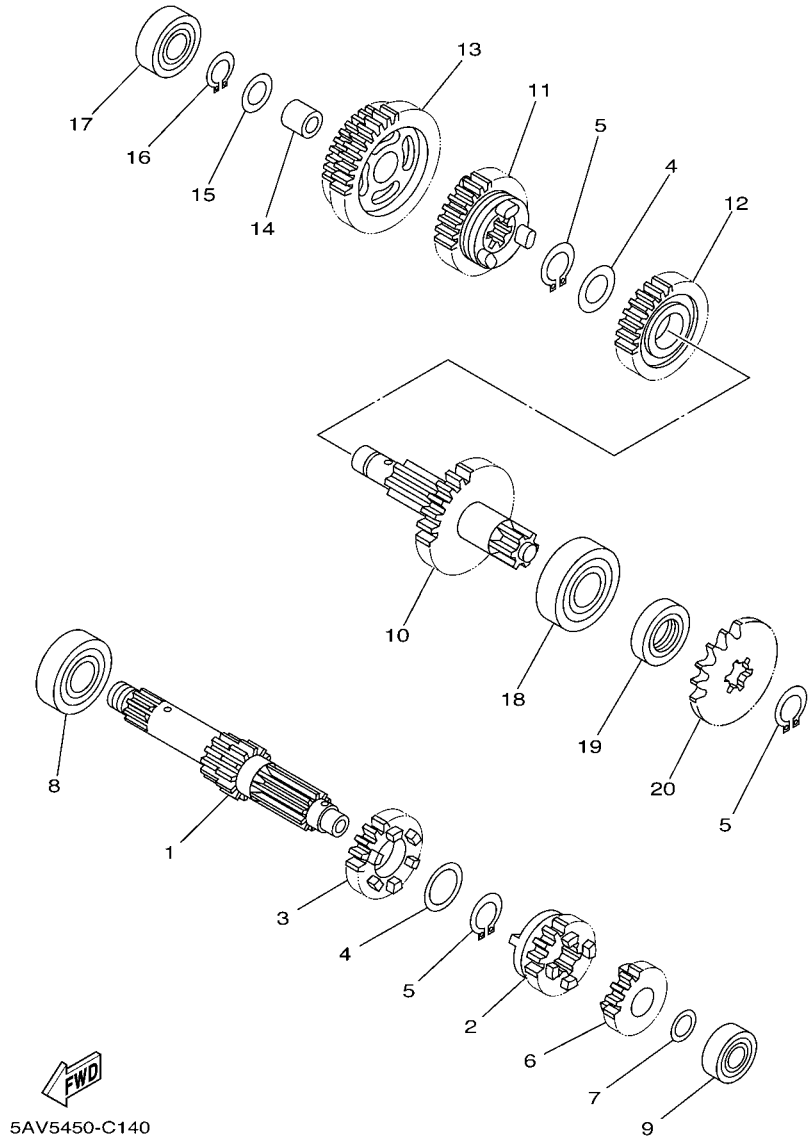

FIG. 14 TRANSMISSION TRANSMISION

REF. NO.	PART NO. CODIGO Nº	DESCRIPTION DESCRIPCION	2P61					REMARKS OBSERVACIONES
1	5AV–E7411–00	AXLE, MAIN EJE PRIMARIO	1					
2	5AV–E7131–00	GEAR, 3RD PINION ENGRANAJE PINON DE 3RA	1					
3	5AV–E7141–00	GEAR, 4TH PINION ENGRANAJE PINON DE 4TA	1					
4	90201–20266	WASHER, PLATE (T=1.0) ARANDELA, PLACA (T=1.0)	2					
5	93410–20038	CIRCLIP SEGURO	3					
6	5AV–E7121–00	GEAR, 2ND PINION ENGRANAJE DE PINON DE 2DA	1					
7	90201–12166	WASHER, PLATE ARANDELA PLANA	1					
8	93306–203X8	BEARING COJINETE	1					
9	93306–001Y1	BEARING COJINETE	1					
10	5AV–E7402–00	DRIVE AXLE ASSY EJE DE TRACCION COMPLETO	1					
11	5AV–E7241–00	GEAR, 4TH WHEEL ENGRANAJE DE RUEDA 4TA	1					
12	5AV–E7231–00	GEAR, 3RD WHEEL ENGRANAJE RUEDA DE 3RA	1					
13	5AV–E7211–00	GEAR, 1ST WHEEL ENGRANAJE RUEDA DE 1 RA	1					
14	90387–1503D	COLLAR ESPACIADOR	1					
15	90201–15700	WASHER, PLATE ARANDELA PLANA	1					
16	93440–15012	CIRCLIP SEGURO	1					
17	93306–20301	BEARING COJINETE	1					
18	93306–204Y6	BEARING COJINETE	1					
19	93102–20366	OIL SEAL SELLO ACEITE	1					
20	93822–15069	SPROCKET,DRIVE (15T) RUEDA DENTADA (15T)	1					

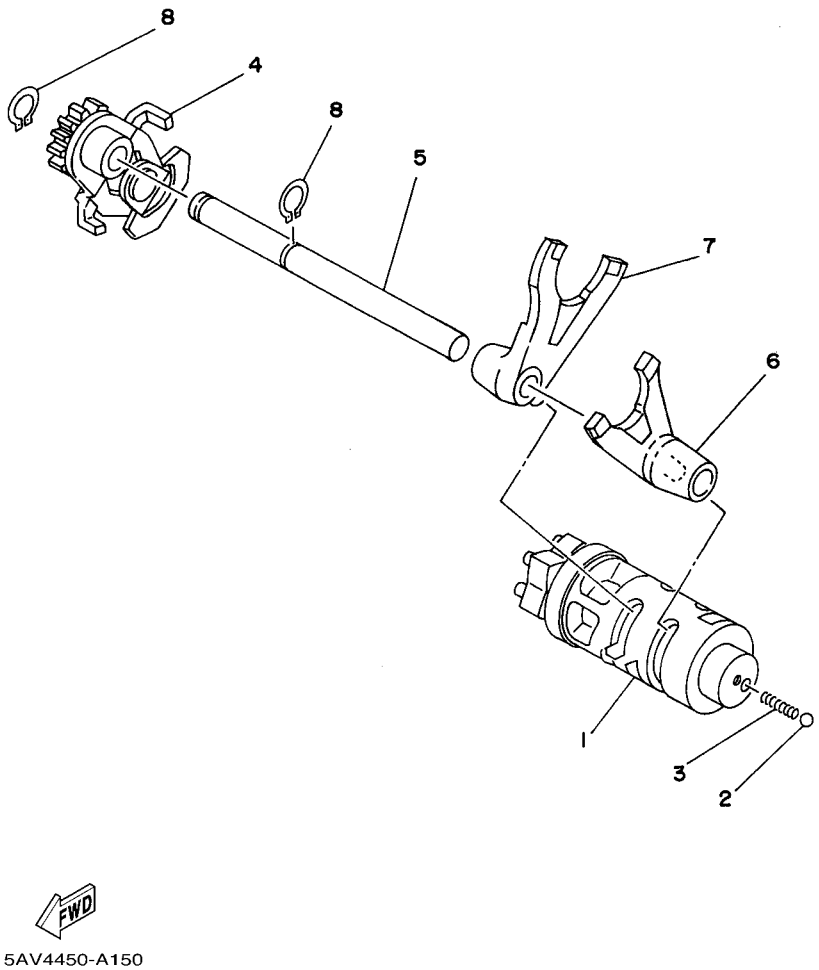

FIG. 15 SHIFT CAM & FORK — LEVA DE CAMBIO & HORQUILLA

REF. NO.	PART NO. CODIGO Nº	DESCRIPTION DESCRIPCION	2P61					REMARKS OBSERVACIONES
1	5AV–E8540–00	SHIFT CAM ASSY LEVA DEL CAMBIO COMPLETA	1					
2	5AV–E8542–00	POINT, NEUTRAL PUNTO MVERTO	1					
3	90501–06022	SPRING, COMPRESSION RESORTE DE COMPRESION	1					
4	5AV–E8120–00	SHIFT LEVER ASSY PALANCA DE SELECTOR COMPLETO	1					
5	5AV–E8531–00	BAR, SHIFT FORK GUIDE 1 BARRA GUIA HORQ. CAMBIO 1	1					
6	5AV–E8511–00	FORK, SHIFT 1 HORQUILLA DEL CAMBIO 1	1					
7	5AV–E8512–00	FORK, SHIFT 2 HORQUILLA DEL CAMBIO 2	1					
8	99009–10400	CIRCLIP PRESILLA REDONDA	2					

FIG. 16 SHIFT SHAFT — EJE DE CAMBIO & PEDAL

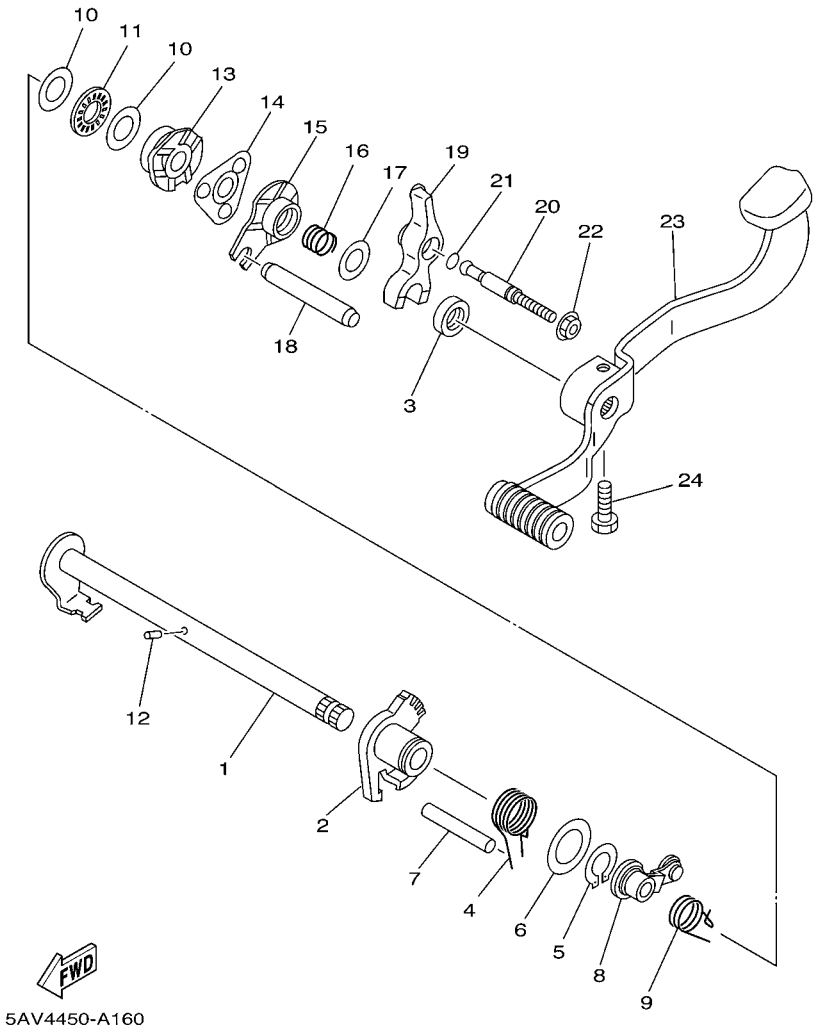

REF. NO.	PART NO. CODIGO Nº	DESCRIPTION DESCRIPCION	2P61					REMARKS OBSERVACIONES
1	5AV–E8101–00	SHIFT SHAFT ASSY EJE SELECTOR COMPLETO	1					
2	5AV–E8152–00	LEVER, SHIFT 4 PALANCA DE CAMBIO 4	1					
3	93102–12106	OIL SEAL (SD 12-22-5 HS) SELLO ACEITE (SD 12-22-5 HS)	1					
4	90508–295A0	SPRING, TORSION RESORTE DE TORSION	1					
5	99009–20400	CIRCLIP PRESILLA REDONDA	1					
6	90201–20276	WASHER, PLATE (T=1.0) ARANDELA, PLACA (T=1.0)	1					
7	93608–50149	PIN, DOWEL PASADOR DE CLAVIJA	1					
8	5AV–E8140–00	STOPPER LEVER ASSY PALANCA DE TOPE COMPLETA	1					
9	90508–265A1	SPRING, TORSION RESORTE DE TORSION	1					
10	90201–127F4	WASHER, PLATE ARANDELA PLANA	2					
11	93340–21210	BEARING COJINETES CON RODAMIENTOS	1					
12	93604–10011	PIN, DOWEL PASADOR DE CLAVIJA	1					
13	5AV–E8179–00	GUIDE GUIA	1					
14	5AV–E8181–00	HOLDER, PAWL SOSTEN DE SUJETADOR	1					
15	5AV–E8172–00	GUIDE, SHIFT GUIA DE CAMBIO	1					
16	90501–125E9	SPRING, COMPRESSION RESORTE DE COMPRESION	1					
17	90201–126A7	WASHER, PLATE ARANDELA PLANA	1					
18	5AV–E8531–10	BAR, SHIFT FORK GUIDE 1 BARRA GUIA HORQ. CAMBIO 1	1					
19	5AV–E817A–00	ARM, SHIFT 3 BRAZO, DE CAMBIO 3	1					
20	5AV–E8186–00	SCREW, ADJUSTING TORNILLO DE AJUSTE	1					
21	93210–06422	O-RING ANILLO O	1					
22	95707–06500	NUT, FLANGE TUERCA DE BRIDA	1					
23	5AV–E8110–00	SHIFT PEDAL ASSY PEDAL DE CAMBIO COMPLETO	1					
24	97027–06020	BOLT PERNO	1					

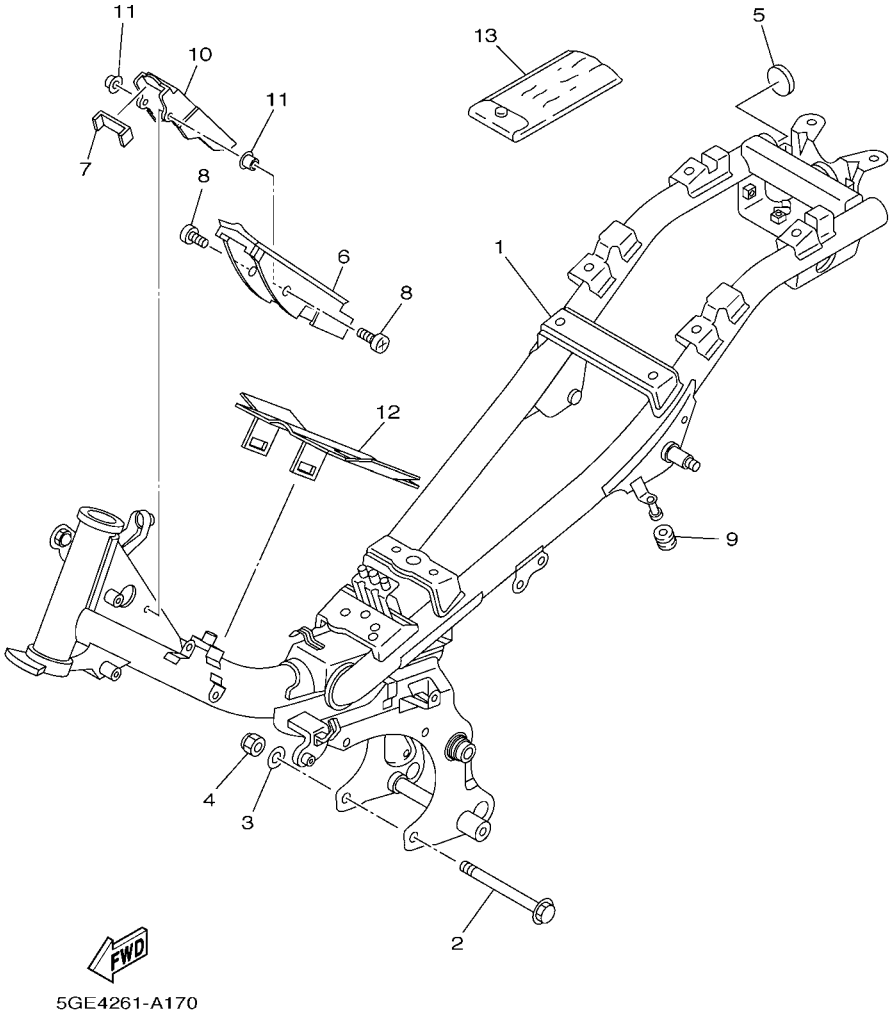

FIG. 17 FRAME CUADRO

REF. NO.	PART NO. CODIGO Nº	DESCRIPTION DESCRIPCION	2P61					REMARKS OBSERVACIONES
1	5GE–F1110–01	FRAME COMP. ARMAZON COMPLETO	1					
2	90105–08024	BOLT, FLANGE TORNILLO	3					
3	90201–086P8	WASHER, PLATE ARANDELA PLANA	3					
4	95607–08200	NUT, SELF-LOCKING TUERCA DE AUTO-CIERRE	1					
5	4ST–F139R–00	COVER 2 CUBIERTA 2	2					
6	4ST–F117F–00	COVER CUBIERTA	1					
7	4ST–F139X–10	DAMPER AMORTIGUADOR	1					
8	90149–06184	SCREW, BINDING TORNILLO DE LIGAR	2					
9	90480–10334	GROMMET TAPON	2					
10	4ST–F117G–01	PROTECTOR PROTECTOR	1					
11	90387–06681	COLLAR ESPACIADOR	2					
12	4ST–F117N–00	COVER 3 CUBIERTA 3	1					
13	5GE–F8100–00	TOOL KIT JUEGO DE HERRAMIENTAS	1					

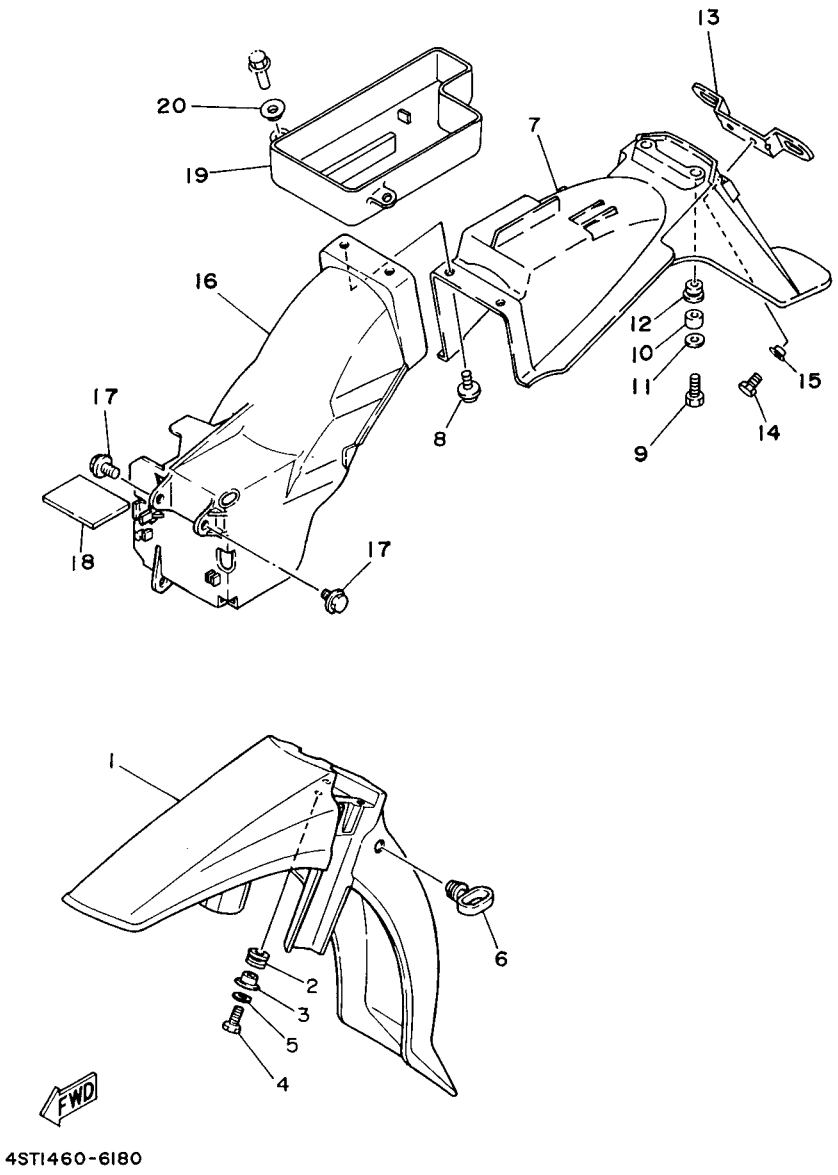

FIG. 18 FENDER GUARDABARRO

REF. NO.	PART NO. CODIGO Nº	DESCRIPTION DESCRIPCION	2P61					REMARKS OBSERVACIONES
1	3XA–F1511–00–PB	FENDER, FRONT GUARDABARRO DELANTERO	1					UR DPBMC UR DPBMC
	3XA–F1511–00–PC	FENDER, FRONT GUARDABARRO DELANTERO	1					UR VRC7 UR VRC7
	3XA–F1511–00–P2	FENDER, FRONT GUARDABARRO DELANTERO	1					UR VDBM3 UR VDBM3
2	90480–12314	GROMMET TAPON	3					
3	90387–06803	COLLAR ESPACIADOR	3					
4	97027–06020	BOLT PERNO	3					
5	92907–06600	WASHER, PLATE ARANDELA	3					
6	4ST–F1518–00	HOLDER, CABLE SOPORTE DE CABLE	1					
7	3XA–F1611–00	FENDER, REAR GUARDABARRO TRASERO	1					
8	90119–06044	BOLT, WITH WASHER TORNILLO CON ARANDELA	2					
9	97007–06020	BOLT PERNO	2					
10	90387–060G7	COLLAR ESPACIADOR	2					
11	90201–06557	WASHER, PLATE ARANDELA PLANA	2					
12	90480–13398	GROMMET TAPON	2					
13	5GE–F1685–00	BRACKET, LICENSE SOPORTE DE LICENCIA	1					
14	97007–06020	BOLT PERNO	2					
15	90387–06500	COLLAR ESPACIADOR	2					
16	4ST–F1629–00	GUARD, MUD GUARDABARRO INFERIOR	1					
17	90119–06044	BOLT, WITH WASHER TORNILLO CON ARANDELA	3					
18	2JG–21638–00	DAMPER 1 AMORTIGUADOR 1	1					
19	5GE–F160E–00	BOX CAJA	1					
20	90387–06681	COLLAR ESPACIADOR	2					

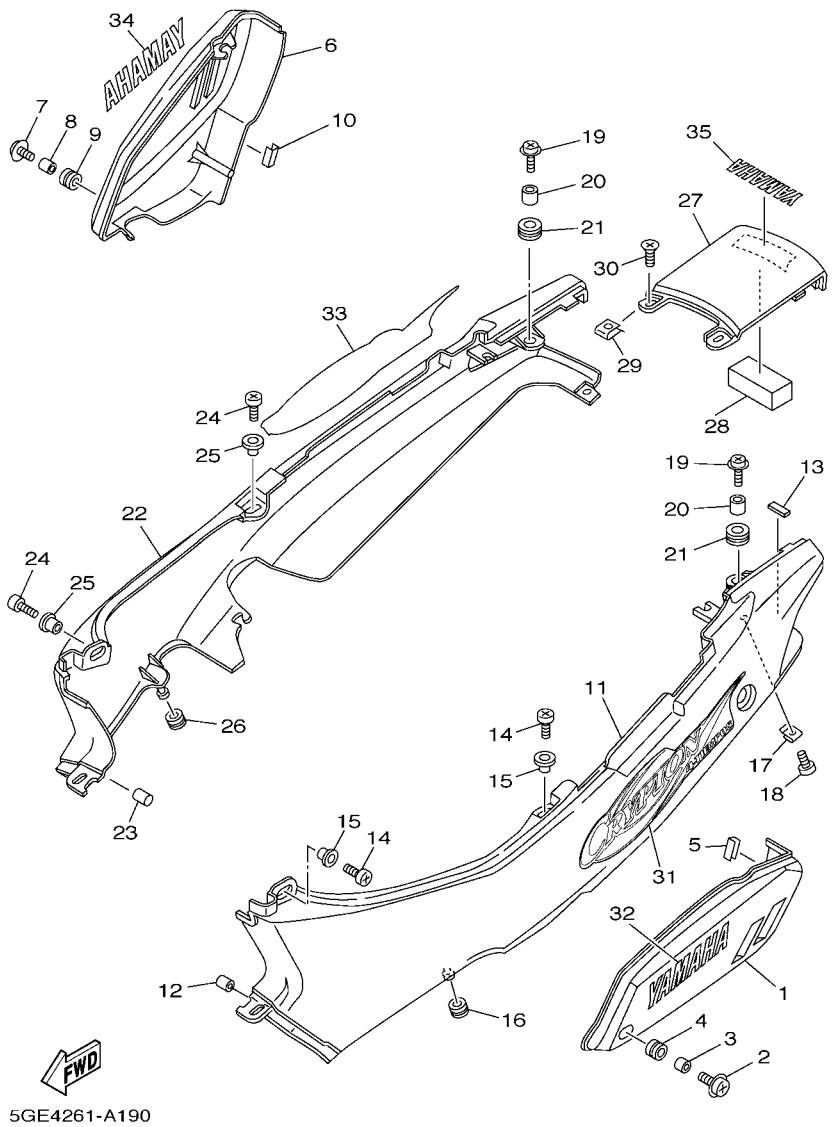

FIG. 19 SIDE COVER — CUBIERTA LATERAL

REF. NO.	PART NO. CODIGO Nº	DESCRIPTION DESCRIPCION	2P61					REMARKS OBSERVACIONES
1	3XA–F1711–00–P9	COVER, SIDE 1 CUBIERTA LATERAL 1	1					UR DPBMC UR DPBMC
	3XA–F1711–00–PA	COVER, SIDE 1 CUBIERTA LATERAL 1	1					UR VRC7 UR VRC7
	3XA–F1711–00–P2	COVER, SIDE 1 CUBIERTA LATERAL 1	1					UR VDBM3 UR VDBM3
2	90159–06067	SCREW, WITH WASHER TORNILLO CON VALONA	1					
3	90387–060G7	COLLAR ESPACIADOR	1					
4	90480–13398	GROMMET TAPON	1					
5	2JG–2171M–10	MOLE, SIDE COVER 2 MUELLE, CUBIERTA LATERAL 2	1					
6	3XA–F1721–00–P9	COVER, SIDE 2 CUBIERTA LATERAL 2	1					UR DPBMC UR DPBMC
	3XA–F1721–00–PA	COVER, SIDE 2 CUBIERTA LATERAL 2	1					UR VRC7 UR VRC7
	3XA–F1721–00–P2	COVER, SIDE 2 CUBIERTA LATERAL 2	1					UR VDBM3 UR VDBM3
7	90159–06067	SCREW, WITH WASHER TORNILLO CON VALONA	1					
8	90387–060G7	COLLAR ESPACIADOR	1					
9	90480–13398	GROMMET TAPON	1					
10	2JG–2171M–10	MOLE, SIDE COVER 2 MUELLE, CUBIERTA LATERAL 2	1					
11	3XA–F1731–00–P9	COVER, SIDE 3 TAPA LATERAL 3	1					UR DPBMC UR DPBMC
	3XA–F1731–00–PA	COVER, SIDE 3 TAPA LATERAL 3	1					UR VRC7 UR VRC7
	3XA–F1731–00–P2	COVER, SIDE 3 TAPA LATERAL 3	1					UR VDBM3 UR VDBM3
12	3XA–F622F–00	DAMPER, LOCATING 1 AMORTIGUADOR, DE UBICACION 1	1					
13	3XA–F174X–01	DAMPER AMORTIGUADOR	1					
14	98507–06016	SCREW, PAN HEAD TORNILLO DE CABEZA CON PLANA	2					
15	90387–06681	COLLAR ESPACIADOR	2					
16	90480–10334	GROMMET TAPON	1					
17	90183–050A1	NUT, SPRING TUERCA DE RESORTE	1					
18	90167–05025	SCREW, TAPPING TORNILLO DE ROSCA HEMBRA	1					
19	90159–06085	SCREW, WITH WASHER TORNILLO CON VALONA	2					
20	90387–060G7	COLLAR ESPACIADOR	2					
21	90480–13398	GROMMET TAPON	2					

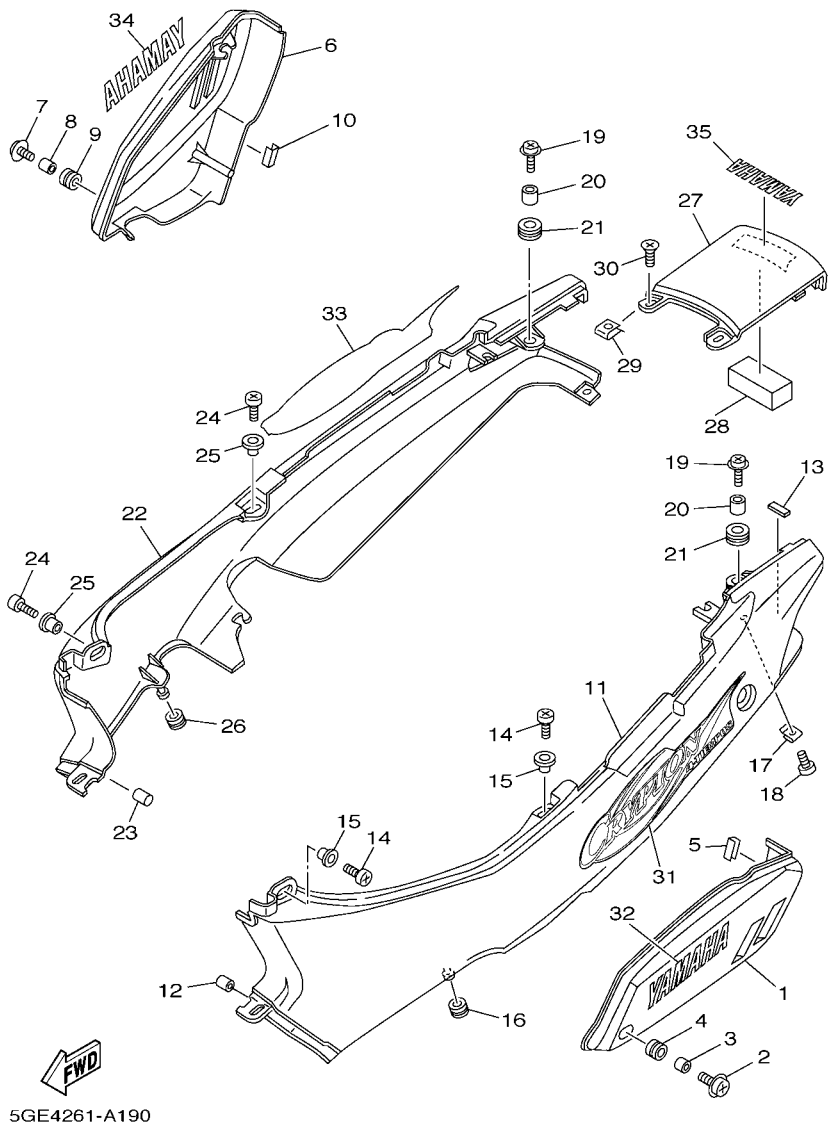

FIG. 19 SIDE COVER — CUBIERTA LATERAL

REF. NO.	PART NO. CODIGO Nº	DESCRIPTION DESCRIPCION	2P61					REMARKS OBSERVACIONES
22	3XA–F1741–00–P9	COVER, SIDE 4 CUBIERTA LATERAL 4	1					UR DPBMC UR DPBMC
	3XA–F1741–00–PA	COVER, SIDE 4 CUBIERTA LATERAL 4	1					UR VRC7 UR VRC7
	3XA–F1741–00–P2	COVER, SIDE 4 CUBIERTA LATERAL 4	1					UR VDBM3 UR VDBM3
23	3XA–F622F–00	DAMPER, LOCATING 1 AMORTIGUADOR, DE UBICACION 1	1					
24	98507–06016	SCREW, PAN HEAD TORNILLO DE CABEZA CON PLANA	2					
25	90387–06681	COLLAR ESPACIADOR	2					
26	90480–10334	GROMMET TAPON	1					
27	3XA–F171E–00–P9	COVER, SIDE 5 CUBIERTA LATERAL 5	1					UR DPBMC UR DPBMC
	3XA–F171E–00–PA	COVER, SIDE 5 CUBIERTA LATERAL 5	1					UR VRC7 UR VRC7
	3XA–F171E–00–P2	COVER, SIDE 5 CUBIERTA LATERAL 5	1					UR VDBM3 UR VDBM3
28	3XA–F174Y–00	DAMPER AMORTIGUADOR	1					
29	90183–050A1	NUT, SPRING TUERCA DE RESORTE	2					
30	90167–05025	SCREW, TAPPING TORNILLO DE ROSCA HEMBRA	2					
31	5GE–F173E–20	GRAPHIC 1 GRAFICO 1	1					UR FOR DPBMC UR PARA DPBMC
	5GE–F173E–30	GRAPHIC 1 GRAFICO 1	1					UR FOR VRC7 UR PARA VRC7
	5GE–F173E–40	GRAPHIC 1 GRAFICO 1	1					UR FOR VDBM3 UR PARA VDBM3
32	99246–00120	EMBLEM, YAMAHA EMBLEMA, YAMAHA	1					
33	5GE–F173F–20	GRAPHIC 2 GRAFICO 2	1					UR FOR DPBMC UR PARA DPBMC
	5GE–F173F–30	GRAPHIC 2 GRAFICO 2	1					UR FOR VRC7 UR PARA VRC7
	5GE–F173F–40	GRAPHIC 2 GRAFICO 2	1					UR FOR VDBM3 UR PARA VDBM3
34	99246–00120	EMBLEM, YAMAHA EMBLEMA, YAMAHA	1					
35	99246–00080	EMBLEM, YAMAHA EMBLEMA, YAMAHA	1					

FIG. 20 REAR ARM & SUSPENSION BRAZO TRASERO & SUSPENSION

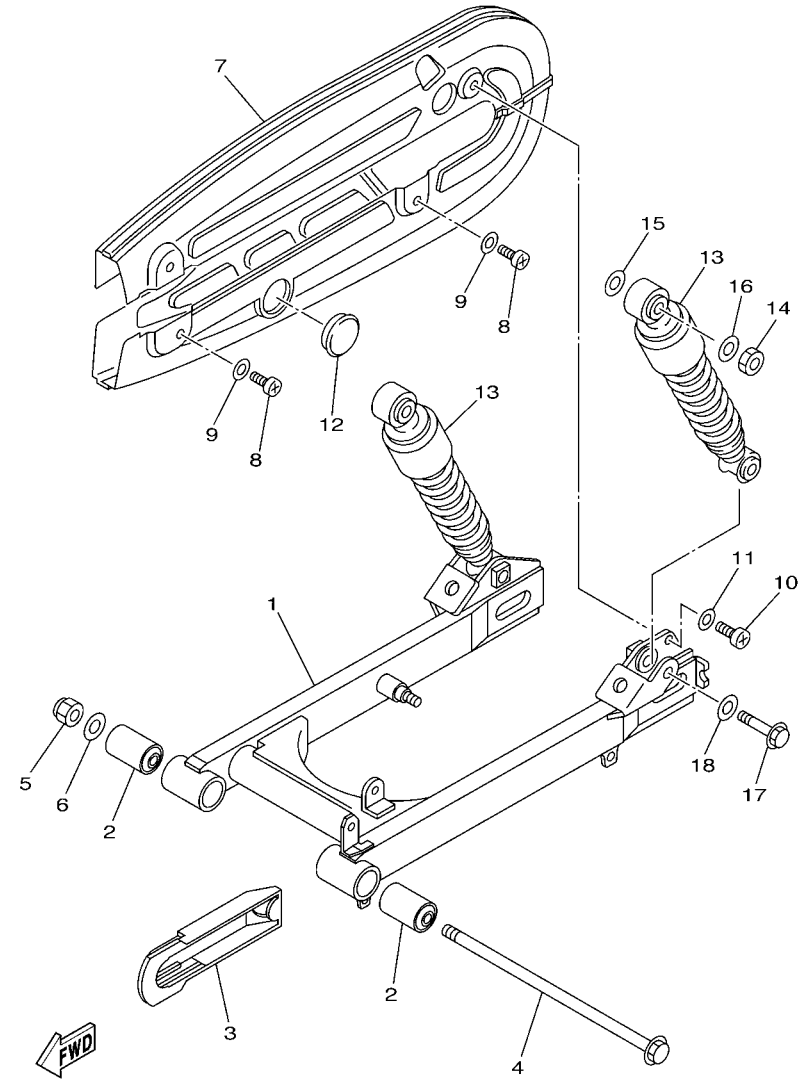

4ST1460-6200

REF. NO.	PART NO. CODIGO Nº	DESCRIPTION DESCRIPCION	2P61					REMARKS OBSERVACIONES
1	5GE–F2110–00	REAR ARM COMP. BRAZO TRASERO COMPLETO	1					
2	307–22123–00	BUSH 1 BUJE 1	2					
3	4ST–F2151–00	SEAL, GUARD SELLO DE GUARDA	1					
4	5GE–F2141–10	SHAFT, PIVOT EJE DEL BARCULANTE	1					
5	90185–12046	NUT, SELF-LOCKING TUERCA AUTOBLOCANTE	1					
6	92907–12600	WASHER, PLATE ARANDELA	1					
7	5GE–F2310–10	CHAIN CASE ASSY CAJA DE CADENA COMPLETA	1					
8	98507–05010	SCREW, PAN HEAD TORNILLO DE CABEZA CON PLANA	3					
9	92907–05600	WASHER, PLATE ARANDELA	3					
10	98504–06010	SCREW, PAN HEAD TORNILLO DE CABEZA CON PLANA	1					
11	92903–06600	WASHER, PLATE RONDANA SENCILLA	1					
12	4ST–F2315–00	CAP TAPA	1					
13	4ST–F2210–00	SHOCK ABSORBER ASSY, REAR AMORTIGUADOR TRASERO COMPLETO	2					
14	95307–10600	NUT TUERCA	2					
15	90201–12190	WASHER, PLATE ARANDELA PLANA	2					
16	90201–106F2	WASHER, PLATE ARANDELA PLANA	2					
17	90105–10778	BOLT, FLANGE TORNILLO	2					
18	92907–10600	WASHER, PLATE ARANDELA	2					

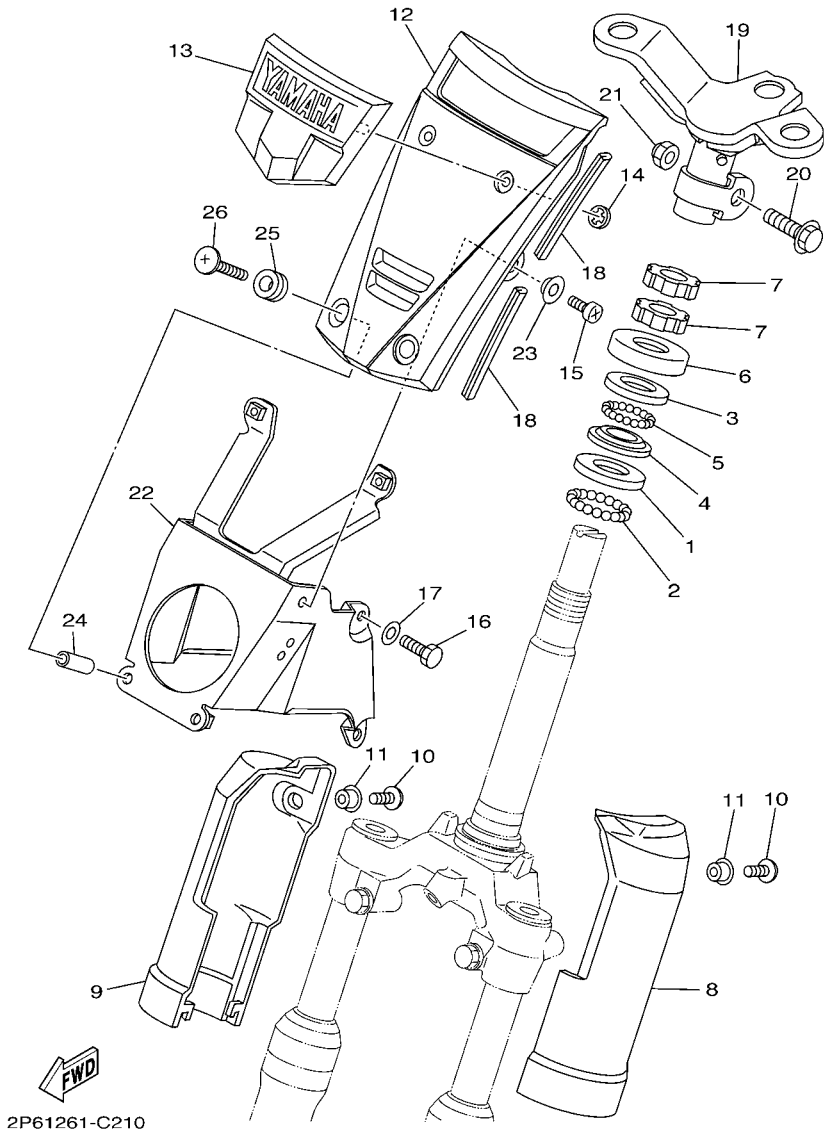

FIG. 21 STEERING DIRECCION

REF. NO.	PART NO. CODIGO Nº	DESCRIPTION DESCRIPCION	2P61					REMARKS OBSERVACIONES
1	156–23412–00	RACE, BALL 2 PISTA DE BOLAS 2	1					
2	93501–04011	BALL BOLA	19					
3	22F–23412–01	RACE, BALL 2 PISTA DE BOLAS 2	1					
4	22F–23411–01	RACE, BALL 1 PISTA DE BOLAS 1	1					
5	93503–16003	BALL ESFERA	22					
6	22F–23416–00	COVER, BALL RACE 2 CUBIERTA DE BASE DE BOLA 2	1					
7	90179–25033	NUT TUERCA	2					
8	3XA–F3122–00–P9	COVER, OUTER 1 CUBIERTA EXTERIOR 1	1					UR DPBMC UR DPBMC
	3XA–F3122–00–PA	COVER, OUTER 1 CUBIERTA EXTERIOR 1	1					UR VRC7 UR VRC7
	3XA–F3122–00–P2	COVER, OUTER 1 CUBIERTA EXTERIOR 1	1					UR VDBM3 UR VDBM3
9	3XA–F3132–00–P9	COVER, OUTER 2 CUBIERTA EXTERIOR 2	1					UR DPBMC UR DPBMC
	3XA–F3132–00–PA	COVER, OUTER 2 CUBIERTA EXTERIOR 2	1					UR VRC7 UR VRC7
	3XA–F3132–00–P2	COVER, OUTER 2 CUBIERTA EXTERIOR 2	1					UR VDBM3 UR VDBM3
10	98507–06016	SCREW, PAN HEAD TORNILLO DE CABEZA CON PLANA	2					
11	90387–06681	COLLAR ESPACIADOR	2					
12	4ST–F3391–00–P8	PANEL, FRONT PANEL DELANTERO	1					UR DPBMC UR DPBMC
	4ST–F3391–00–P9	PANEL, FRONT PANEL DELANTERO	1					UR VRC7 UR VRC7
	4ST–F3391–00–P2	PANEL, FRONT PANEL DELANTERO	1					UR VDBM3 UR VDBM3
13	4ST–23108–00	EMBLEM EMBLEMA	1					
14	90183–04005	NUT, SPRING TUERCA DE RESORTE	2					
15	98907–05010	SCREW, BIND TORNILLO DE LIGAR	2					
16	97007–06012	BOLT PERNO	4					
17	92907–06600	WASHER, PLATE ARANDELA	4					
18	56J–23398–00	MOLD, FRONT MOLDURA DELANTERA	4					
19	4ST–F3461–00	BRACKET, HANDLE SOPORTE DE MANUBRIO	1					
20	90105–10036	BOLT, FLANGE TORNILLO	1					
21	90185–10154	NUT, SELF-LOCKING TUERCA AUTOBLOCANTE	1					

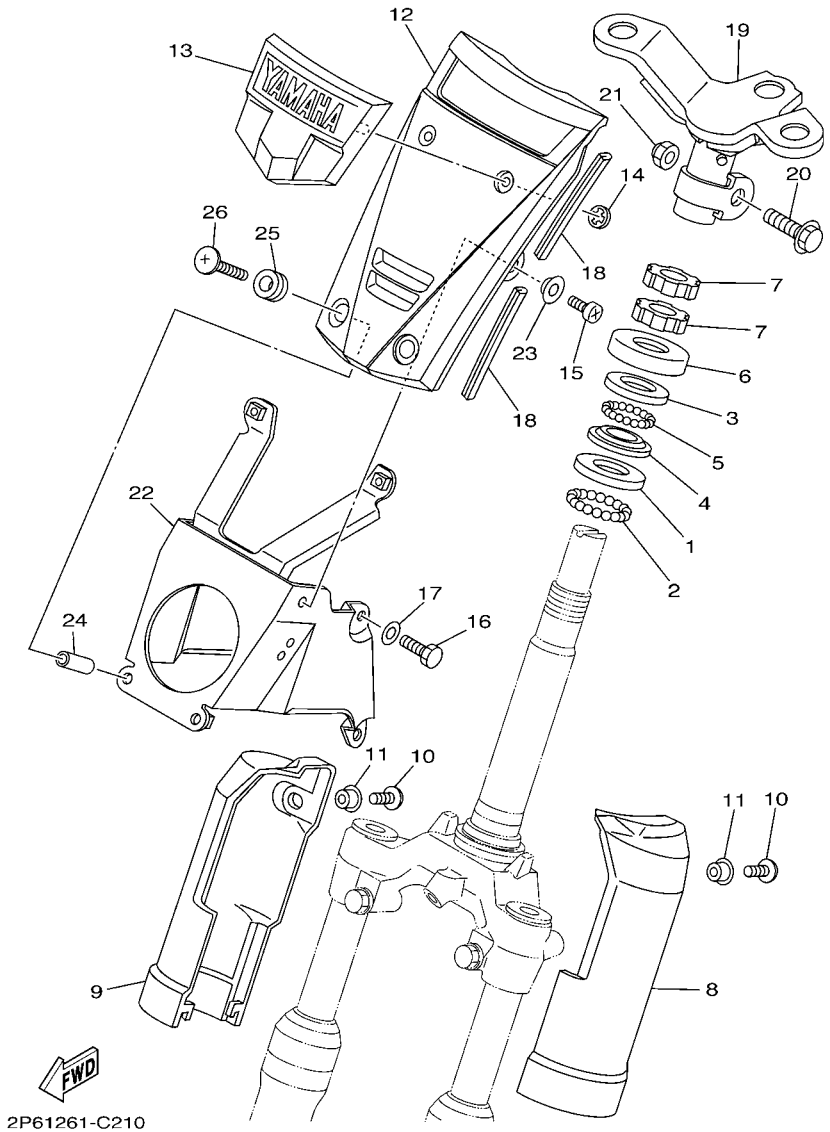

FIG. 21 STEERING DIRECCION

REF. NO.	PART NO. CODIGO Nº	DESCRIPTION DESCRIPCION	2P61					REMARKS OBSERVACIONES
22	5GE–F331A–00	STAY APOYO	1					
23	90387–053Y7	COLLAR ESPACIADOR	2					
24	90387–06676	COLLAR ESPACIADOR	2					
25	90480–15397	GROMMET TAPON	2					
26	90150–06037	SCREW, ROUND HEAD TORNILLO CABEZA REDONDA	2					

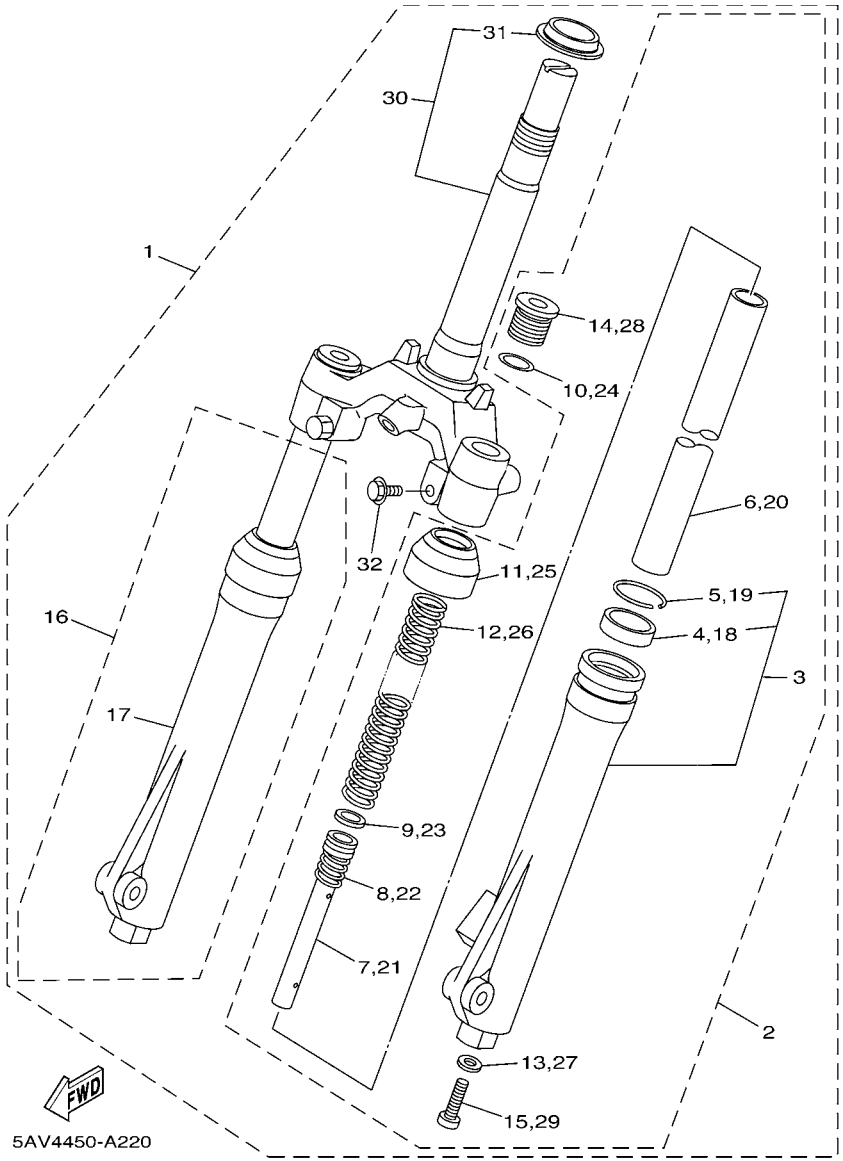

FIG. 22 FRONT FORK HORQUILLA DELANTERA

REF. NO.	PART NO. CODIGO Nº	DESCRIPTION DESCRIPCION	2P61					REMARKS OBSERVACIONES
1	4ST–F3100–10	FRONT FORK ASSY HORQUILLA DELANTERA COMPLETA	1					
2	4ST–F3102–00	FRONT FORK ASSY (L.H) HORQUILLA DELANTERA COMPL.(MI)	1					UR UR
	4ST–F3102–10	FRONT FORK ASSY (L.H) HORQUILLA DELANTERA COMPL.(MI)	1					UR UR
3	2JG–F3126–00–WN	.TUBE, OUTER (LEFT) .TUBO EXTERIOR (IZQUIERDO)	1					
4	2JG–F3145–00	..OIL SEAL ..RETEN DE ACEITE	1					
5	1T8–F3156–00	..CLIP, OIL SEAL ..PRESILLA DEL RETEN DE ACEITE	1					
6	2JG–F3110–00	.INNER TUBE COMP.1 .TUBO INTERIOR COMPLETO 1	1					
7	3SB–F3170–00	.CYLINDER COMP., FRONT FORK .CILINDRO COMPL DE HORQ DELAN	1					
8	2JG–F3152–00	.SPRING, SUB .RESORTE DE SUBENSAMBLE	1					
9	2JG–F3157–00	.RING, PISTON .ANILLO DEL PISTON	1					
10	2JG–F3147–00	.O-RING .ARO	1					
11	2JG–F3144–00	.SEAL, DUST .GUARDAPOLVO	1					
12	4ST–F3141–00	.SPRING, FRONT FORK .RESORTE HORQUILLA DELANT.	1					
13	509–F3158–L0	.GASKET .EMPAQUE	1					
14	2JG–F3111–00	.BOLT, CAP .TAPON	1					
15	278–F3181–50	.BOLT, HEXAGON SOCKET HEAD .TORNILLO CABEZAHEXAGONAL	1					
16	4ST–F3103–00	FRONT FORK ASSY (R.H) HORQUILLA DELANTERA COMPL.(MD)	1					UR UR
	4ST–F3103–10	FRONT FORK ASSY (R.H) HORQUILLA DELANTERA COMPL.(MD)	1					UR UR
17	2JG–F3136–00–WN	.TUBE, OUTER (RIGHT) .TUBO EXTERIOR (DER.)	1					
18	2JG–F3145–00	..OIL SEAL ..RETEN DE ACEITE	1					
19	1T8–F3156–00	..CLIP, OIL SEAL ..PRESILLA DEL RETEN DE ACEITE	1					
20	2JG–F3110–00	.INNER TUBE COMP.1 .TUBO INTERIOR COMPLETO 1	1					
21	3SB–F3170–00	.CYLINDER COMP., FRONT FORK .CILINDRO COMPL DE HORQ DELAN	1					
22	2JG–F3152–00	.SPRING, SUB .RESORTE DE SUBENSAMBLE	1					
23	2JG–F3157–00	.RING, PISTON .ANILLO DEL PISTON	1					
24	2JG–F3147–00	.O-RING .ARO	1					
25	2JG–F3144–00	.SEAL, DUST .GUARDAPOLVO	1					

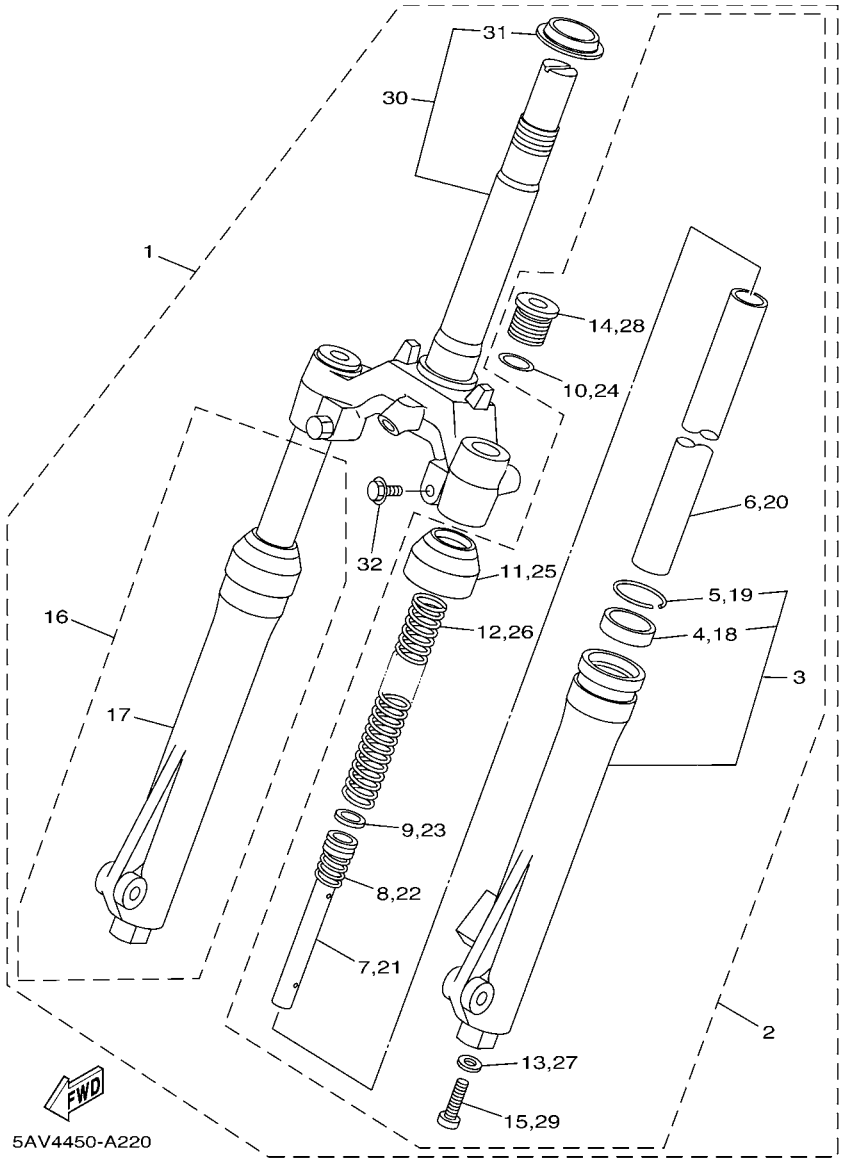

FIG. 22 FRONT FORK — HORQUILLA DELANTERA

REF. NO.	PART NO. CODIGO Nº	DESCRIPTION DESCRIPCION	2P61					REMARKS OBSERVACIONES
26	4ST–F3141–00	.SPRING, FRONT FORK .RESORTE HORQUILLA DELANT.	1					
27	509–F3158–L0	.GASKET .EMPAQUE	1					
28	2JG–F3111–00	.BOLT, CAP .TAPON	1					
29	278–F3181–50	.BOLT, HEXAGON SOCKET HEAD .TORNILLO CABEZAHEXAGONAL	1					
30	3YR–F3340–00	.UNDER BRACKET COMP. .PLATINA INFERIOR COMPLETA	1					
31	156–23411–00	..RACE, BALL 1 ..PISTA DE BOLAS 1	1					
32	3YR–F3346–00	.BOLT 1 .PERNO 1	2					

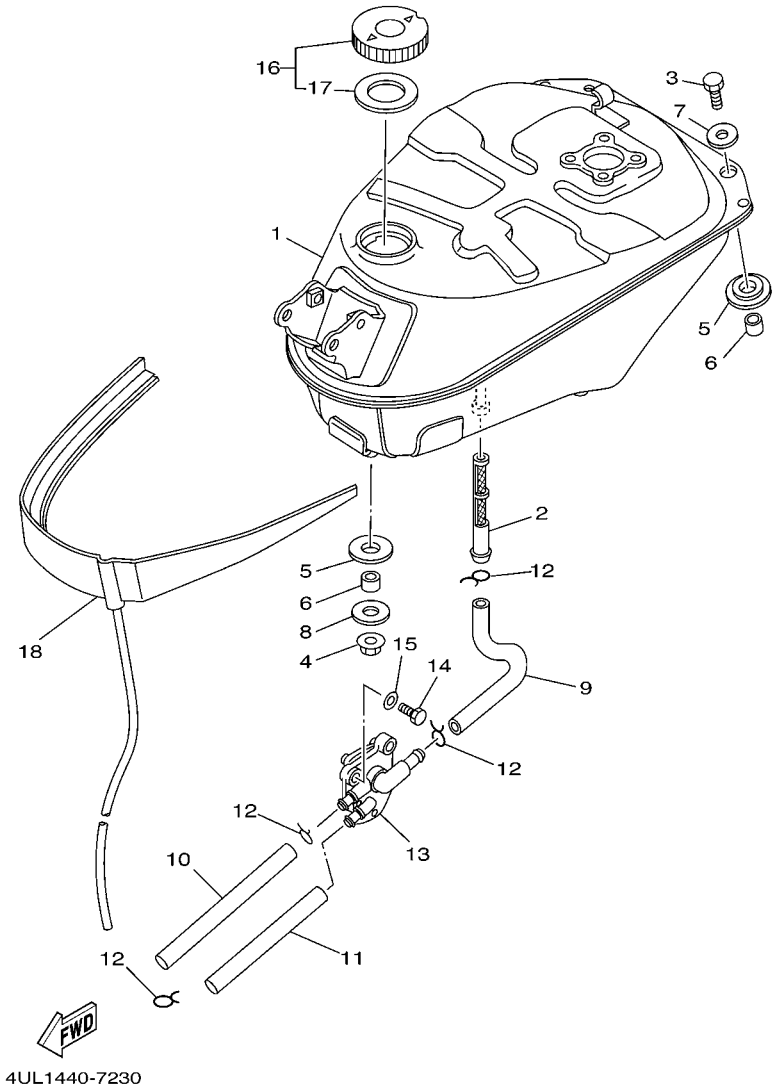

FIG. 23 FUEL TANK — DEPOSITO DE COMBUSTIBLE

REF. NO.	PART NO. CODIGO Nº	DESCRIPTION DESCRIPCION	2P61					REMARKS OBSERVACIONES
1	5GE–F4110–00	FUEL TANK COMP. DEPOSITO DE COMBUSTIBLE COMP.	1					
2	5BM–24514–00	NET, FILTER 1 RED DE FILTRO 1	1					
3	97007–06020	BOLT PERNO	2					
4	95707–08500	NUT, FLANGE TUERCA DE BRIDA	1					
5	90480–18476	GROMMET TAPON	3					
6	90387–084N8	COLLAR ESPACIADOR	3					
7	90201–064K6	WASHER, PLATE ARANDELA PLANA	2					
8	90201–08766	WASHER, PLATE ARANDELA PLANA	1					
9	5DW–24311–00	PIPE, FUEL 1 TUBO DE COMBUSTIBLE 1	1					
10	5DW–24312–00	PIPE 2 TUBO 2	1					
11	5DW–24313–00	PIPE 3 TUBO 3	1					
12	90467–10008	CLIP PRESILLA	4					
13	5HV–24500–00	FUEL COCK ASSY 1 GRIFO DE COMBUSTIBLE 1	1					
14	97007–06012	BOLT PERNO	2					
15	92907–06600	WASHER, PLATE ARANDELA	2					
16	22F–24610–10	CAP ASSY TAPA COMPLETA	1					
17	3T5–24612–10	.GASKET, CAP .EMPAQUE DE TAPA	1					
18	5DW–F4141–00	PROTECTOR, FUEL TANK PROTECTOR DEPOSITO COMBUST.	1					

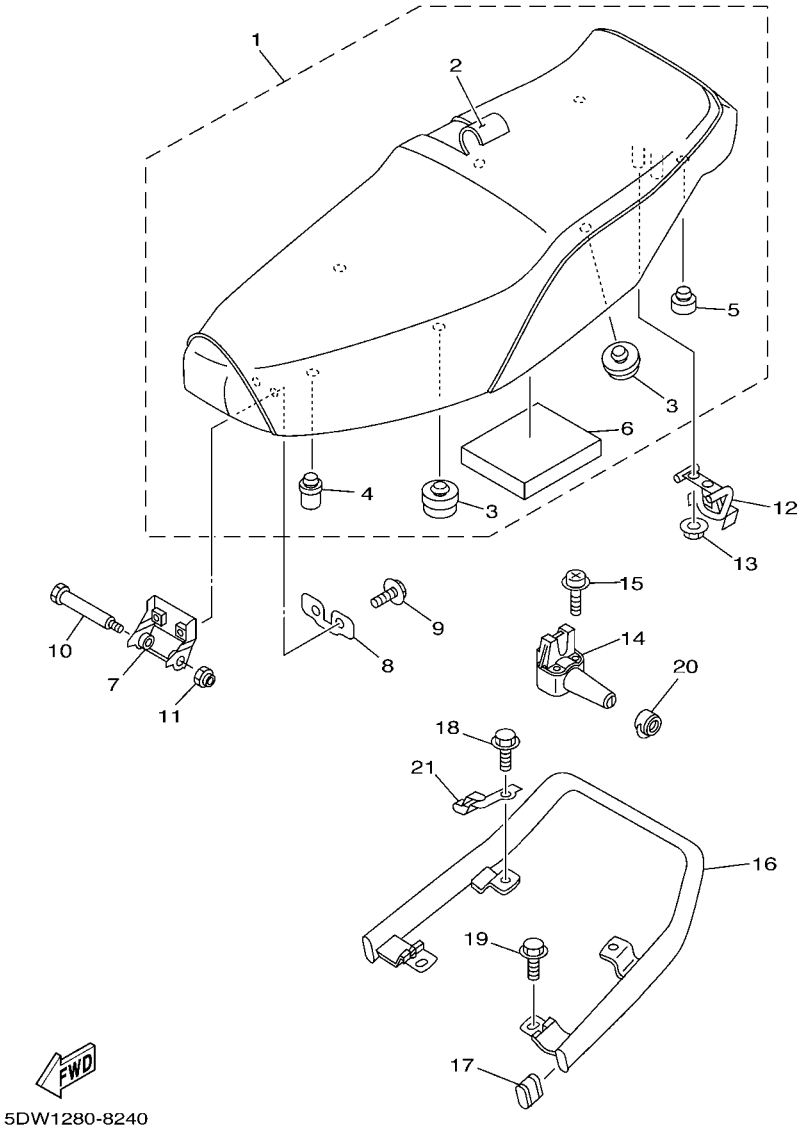

FIG. 24 SEAT ASIENTO

REF. NO.	PART NO. CODIGO Nº	DESCRIPTION DESCRIPCION	2P61					REMARKS OBSERVACIONES
1	5GE–F4730–00	DOUBLE SEAT ASSY SILLIN DOBLE COMPLETO	1					
2	5GE–F470F–00	.SEAT COVER COMP. .FUNDADE SILLIN	1					
3	5GE–F4741–00	.PAD, SEAT .COJIN DE ASIENTO	4					
4	3AY–F4763–00	.PAD, SEAT 2 .COJIN DE ASIENTO 2	1					
5	3L7–24724–00	.DAMPER, SEAT .AMORTIGUADOR DE ASIENTO	2					
6	3XA–F472E–01	.SEAL .SELLO	1					
7	3XA–F4726–00	HINGE, SEAT HINGE SEAT	1					
8	3XA–F4744–00	PLATE, SEAT FITTING PLACA ACCESORIA DE ASIENTO	1					
9	90119–06044	BOLT, WITH WASHER TORNILLO CON ARANDELA	2					
10	90109–065E0	BOLT PERNO	1					
11	95607–06100	NUT, U TUERCA AUTOBLOCANTE	1					
12	5GE–F4728–00	BRACKET, SEAT SOPORTE DE ASIENTO	1					
13	95707–06500	NUT, FLANGE TUERCA DE BRIDA	2					
14	3AY–F4780–V0	SEAT LOCK ASSY CERRADURA SILLIN COMPLETO	1					
15	90159–06064	SCREW, WITH WASHER TORNILLO CON VALONA	2					
16	3XA–F4773–00	HANDLE, SEAT MANIJA DE ASIENTO	1					
17	3AY–F4742–00	GROMMET ANILLO PROTECTOR	2					
18	95827–06012	BOLT, FLANGE TUERCA DE REBORDE	2					
19	95827–06016	BOLT, FLANGE TUERCA DE REBORDE	2					
20	3AY–F4796–00	COVER CUBIERTA	1					
21	3XA–F1398–00	HANGER, HELMET COLGADOR DE CASCO	1					

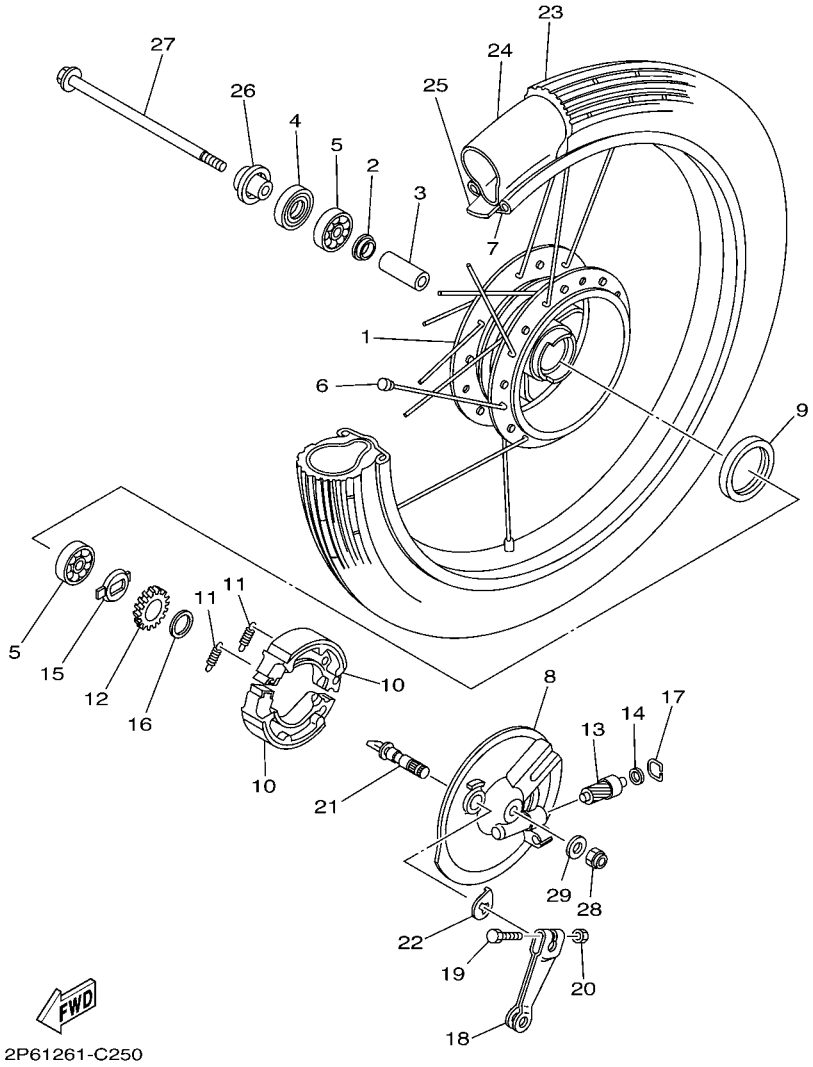

FIG. 25 FRONT WHEEL RUEDA DELANTERA

REF. NO.	PART NO. CODIGO Nº	DESCRIPTION DESCRIPCION	2P61					REMARKS OBSERVACIONES
1	3AY–F5111–01–WN	HUB, FRONT MASA DELANTERA	1					CIS CIS
2	4ST–F5115–01	FLANGE, SPACER 1 BRIDA DE ESPACIADOR 1	1					
3	90560–10292	SPACER SEPARADOR	1					
4	93106–20816	OIL SEAL SELLO ACEITE	1					
5	93306–300Y6	BEARING COJINETE	2					
6	23T–F5104–00	SPOKE SET, FRONT JUEGO DE RAYOS DELANTERO	1					
7	94412–17847	RIM (1.20-17) ARO (1.20-17)	1					
8	3AY–F5121–00–WN	PLATE, BRAKE SHOE PLACA DE ZAPATA DE FRENO	1					CIS CIS
9	93105–47807	OIL SEAL SELLO ACEITE	1					
10	23T–F5330–00	BRAKE SHOE COMP. ZAPATA DE FRENO COMPLETA	2					
11	90506–18288	SPRING, TENSION RESORTE DE TENSION	2					
12	2JG–25135–00	GEAR, DRIVE (20T) ENGRANAJE DE TRACCION (20T)	1					
13	2JG–25138–00	GEAR, METER (8T) ENGRANAJE DE MEDIDOR (8T)	1					
14	90201–064L6	WASHER, PLATE ARANDELA PLANA	1					
15	183–25149–00	CLUTCH, METER EMBRAGUE DEL CUENTAKMS	1					
16	90201–20269	WASHER, PLATE ARANDELA PLANA	1					
17	2T4–25137–00	RING, STOP ANILLO DE TOPE	1					
18	5GE–F5155–00	LEVER, CAMSHAFT 1 PALANCA DE ARBOL DE LEVAS	1					
19	90101–06278	BOLT TORNILLO	1					
20	95307–06600	NUT TUERCA	1					
21	3Y6–F5351–00	CAMSHAFT ARBOL DE LEVAS	1					
22	4ST–F533A–00	PLATE, INDICATOR PLACA INDICADOR	1					
23	94122–17W07	TIRE (2.25-17) NEUMATICO (2.25-17)	1					PIRELLI PIRELLI
24	94222–17W02	TUBE (2.25-17) TUBO (2.25-17)	1					PIRELLI PIRELLI
25	94322–17858	BAND, RIM (1.20-17) BANDA DE ARO (1.20-17)	1					INOUE INOUE
26	5GE–F5183–00	COLLAR, WHEEL COLLAR DE RUEDA	1					
27	5GE–F5181–10	AXLE, WHEEL EJE DE LA RUEDA	1					

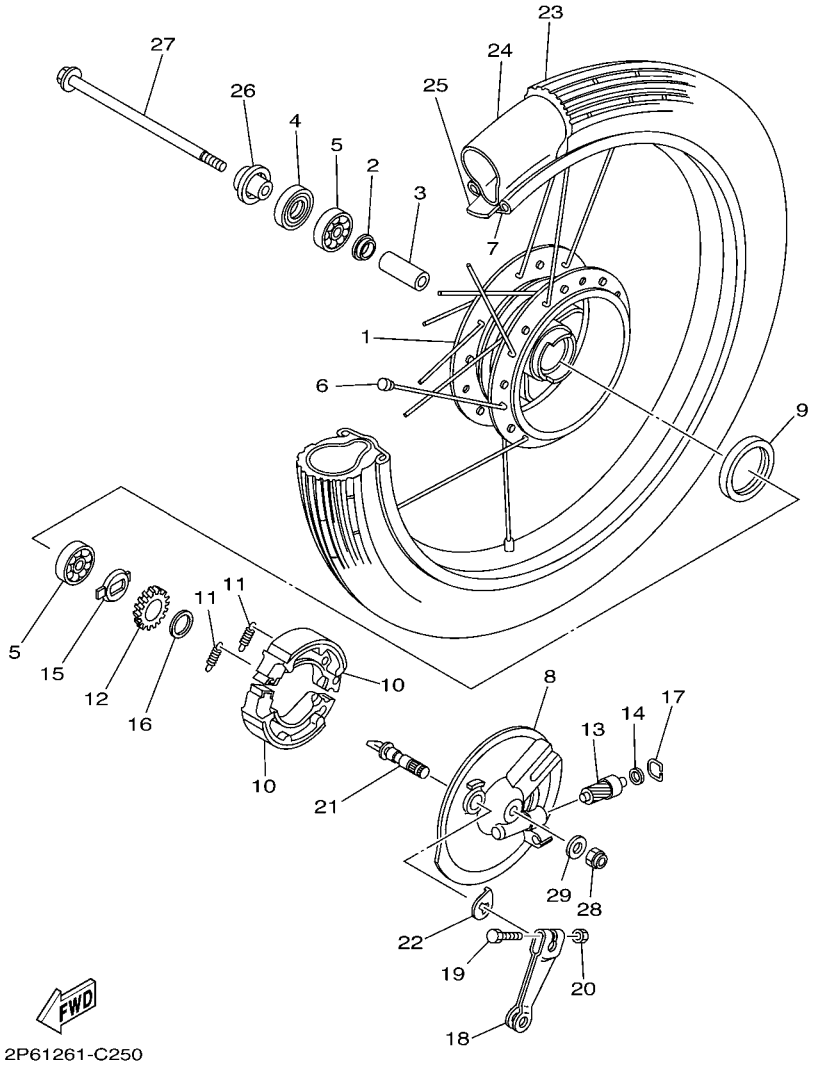

FIG. 25 FRONT WHEEL RUEDA DELANTERA

REF. NO.	PART NO. CODIGO Nº	DESCRIPTION DESCRIPCION	2P61					REMARKS OBSERVACIONES
28	90185–10091	NUT, SELF-LOCKING TUERCA AUTOBLOCANTE	1					
29	90201–101J1	WASHER, PLATE ARANDELA PLANA	1					

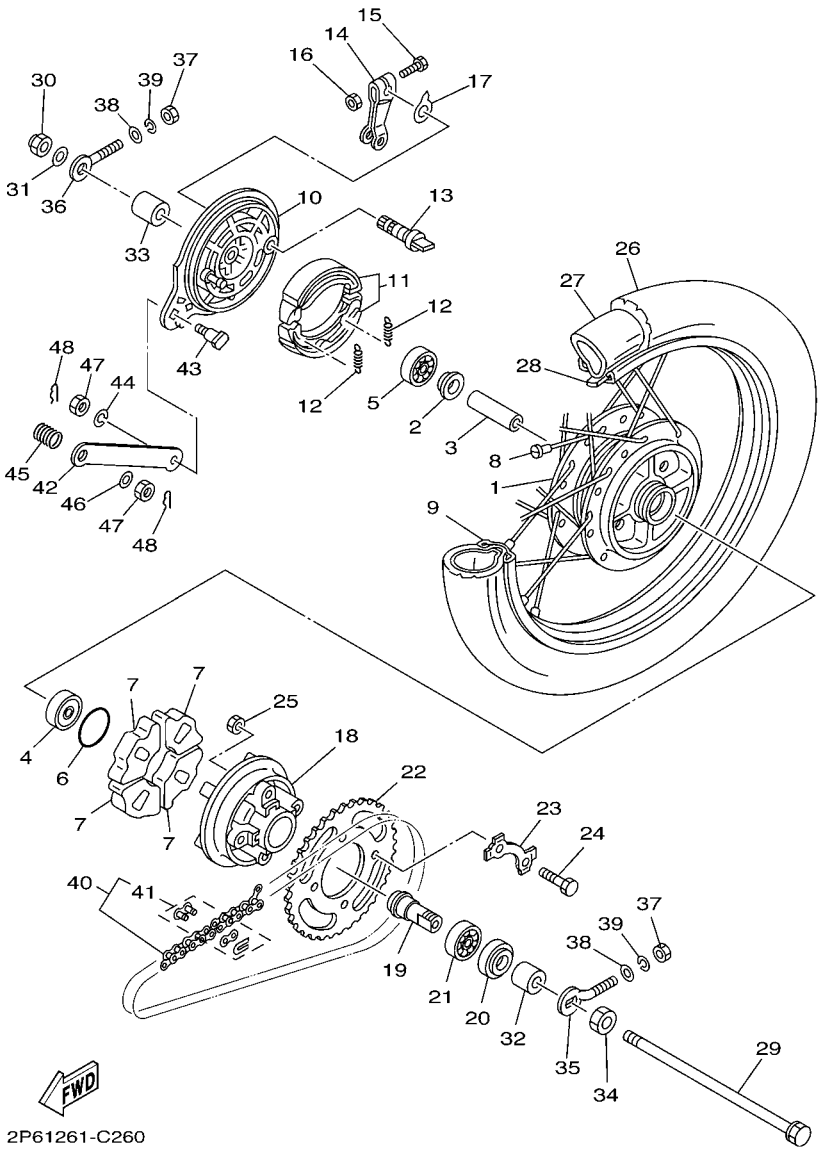

FIG. 26 REAR WHEEL RUEDA TRASERA

REF. NO.	PART NO. CODIGO Nº	DESCRIPTION DESCRIPCION	2P61					REMARKS OBSERVACIONES
1	23T–F5311–01	HUB, REAR MASA TRASERA	1					
2	4ST–F5315–00	FLANGE, SPACER SEPARADOR	1					
3	90560–12145	SPACER SEPARADOR	1					
4	93306–301Y9	BEARING COJINETE	1					
5	93306–301Y8	BEARING COJINETE	1					
6	93210–41041	O-RING ANILLO O	1					
7	5GE–F5364–00	DAMPER AMORTIGUADOR	4					
8	23T–F5304–01	SPOKE SET, REAR JUEGO DE RAYOS TRASEROS	1					
9	94414–17849	RIM (1.40-17) ARO (1.40-17)	1					
10	23T–F5321–02–WN	PLATE, BRAKE SHOE PLACA DE ZAPATA DE FRENO	1					CIS CIS
11	5TP–F530K–00	BRAKE SHOE SET JUEGO DE ZAPATA DE FRENO	1					
12	90506–18288	SPRING, TENSION RESORTE DE TENSION	2					
13	3Y6–F5351–00	CAMSHAFT ARBOL DE LEVAS	1					
14	5GE–F5355–00	LEVER, CAMSHAFT PALANCA DE ARBOL DE LEVAS	1					
15	90101–06278	BOLT TORNILLO	1					
16	95307–06600	NUT TUERCA	1					
17	4ST–F533A–00	PLATE, INDICATOR PLACA INDICADOR	1					
18	37J–F5366–02	CLUTCH, HUB EMBRAGUE DE MASA	1					
19	5GE–F5387–00	AXLE, SPROCKET EJE DE CORONA	1					
20	93106–30817	OIL SEAL SELLO ACEITE	1					
21	93306–004XC	BEARING COJINETE	1					
22	5GE–F5437–00	SPROCKET, DRIVEN (37T) CORONA (37T)	1					
23	4JF–F5412–10	WASHER ARANDELA	2					
24	90109–08361	BOLT PERNO	4					
25	90179–08168	NUT TUERCA	4					
26	94125–17W08	TIRE (2.50-17) NEUMATICO (2.50-17)	1					PIRELLI PIRELLI
27	94222–17W02	TUBE (2.25-17) TUBO (2.25-17)	1					PIRELLI PIRELLI

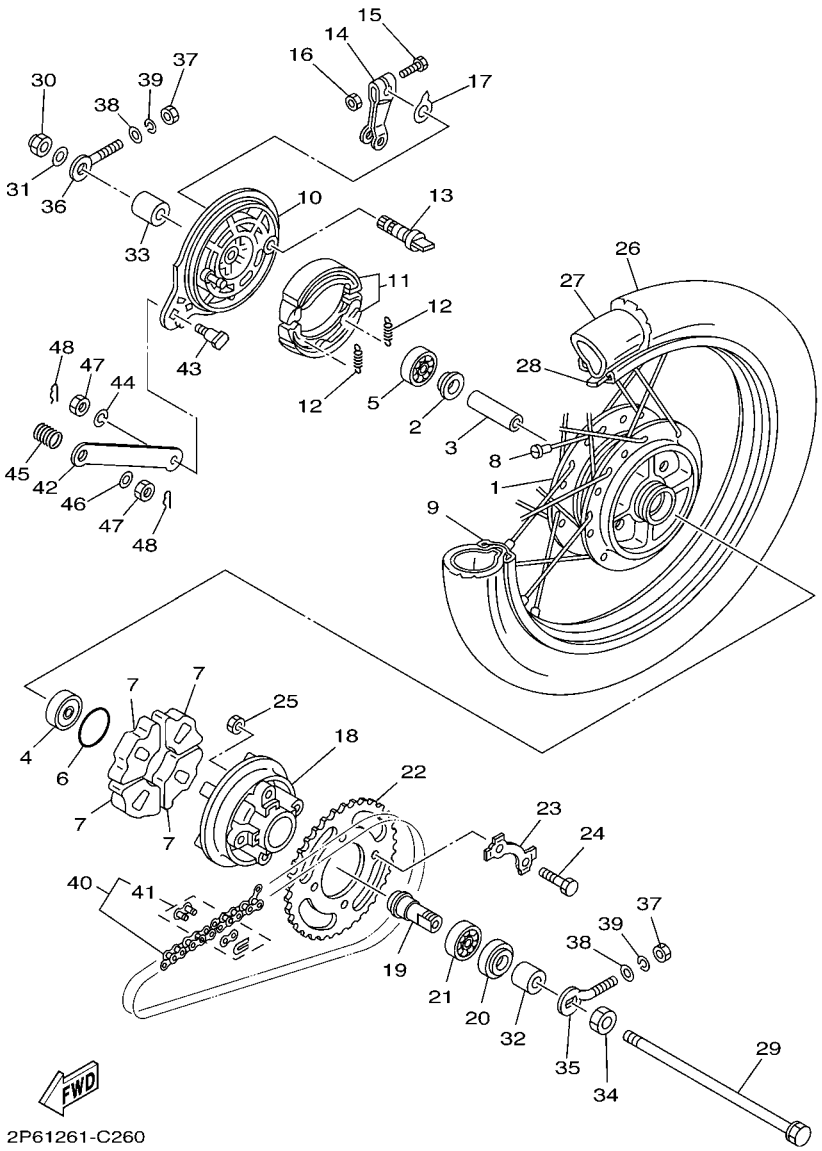

FIG. 26 REAR WHEEL — RUEDA TRASERA

REF. NO.	PART NO. CODIGO Nº	DESCRIPTION DESCRIPCION	2P61					REMARKS OBSERVACIONES
28	94325–17004	BAND,RIM (1.40-17) BANDA DE ARO (2.50-17)	1					INOUE INOUE
29	3AY–F5381–01	AXLE, WHEEL EJE DE RUEDA	1					
30	90185–12046	NUT, SELF-LOCKING TUERCA AUTOBLOCANTE	1					
31	90201–12688	WASHER, PLATE ARANDELA PLANA	1					
32	90387–12879	COLLAR ESPACIADOR	1					
33	90387–18880	COLLAR ESPACIADOR	1					
34	90170–18165	NUT TUERCA	1					
35	4JE–F5388–00	PULLER, CHAIN 1 TIRADOR DE CADENA 1	1					
36	4JE–F5389–00	PULLER, CHAIN 2 TIRADOR DE CADENA 2	1					
37	95307–06600	NUT TUERCA	2					
38	90201–061A5	WASHER, PLATE ARANDELA PLANA	2					
39	92907–06100	WASHER, SPRING ARANDELA	2					
40	94580–24098	CHAIN (DID428 98L) CADENA (DID428 98L)	1					
41	94680–24001	.JOINT, CHAIN (DID 428) .CONECTOR DE CADENA (DID 428)	1					
42	59L–F5371–00	BAR, TENSION BARRA TENSORA	1					
43	90109–08183	BOLT PERNO	1					
44	92907–08100	WASHER, SPRING ARANDELA	1					
45	90501–205E8	SPRING, COMPRESSION RESORTE DE COMPRESION	1					
46	90201–087F0	WASHER, PLATE ARANDELA PLANA	1					
47	95307–08700	NUT TUERCA	2					
48	90468–12007	CLIP PRESILLA	2					

FIG. 27 STEERING HANDLE & CABLE MANILLAR & CABLE

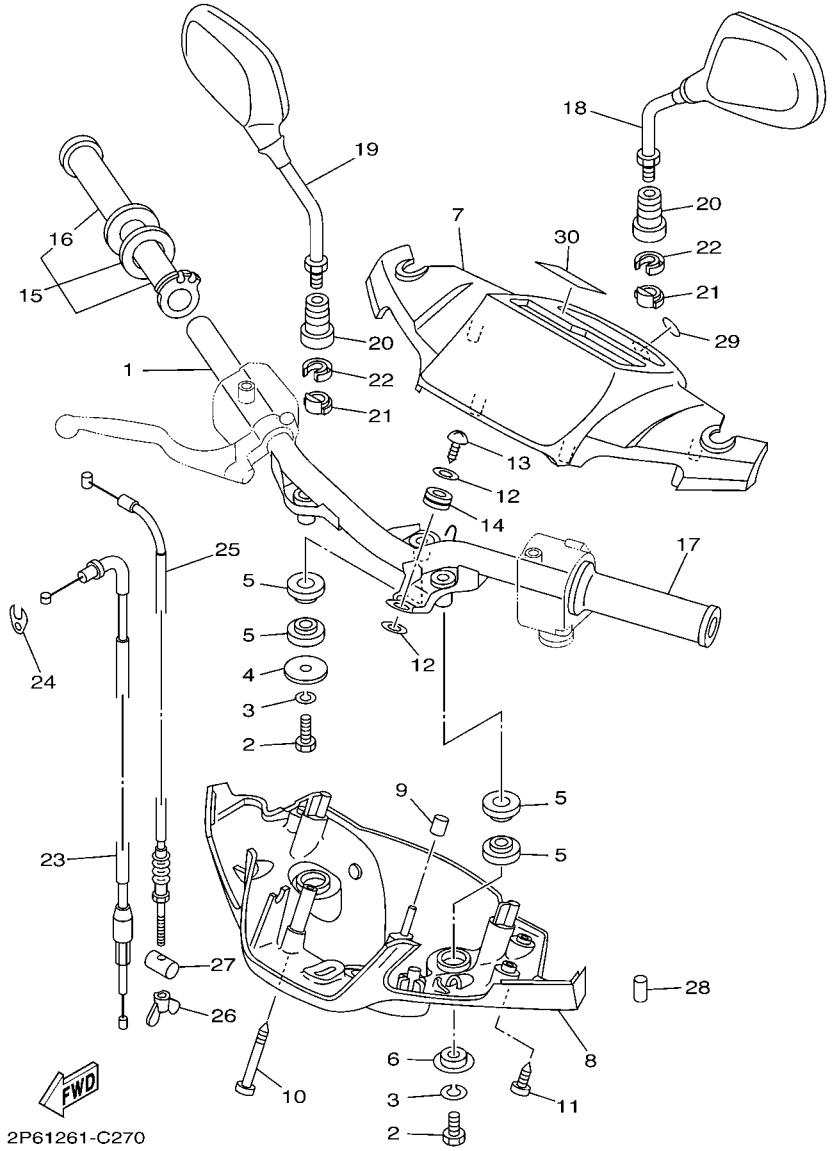

REF. NO.	PART NO. CODIGO Nº	DESCRIPTION DESCRIPCION	2P61					REMARKS OBSERVACIONES
1	3XA–F6210–00	HANDLE MANUBRIO	1					
2	97007–08016	BOLT PERNO	3					
3	92907–08100	WASHER, SPRING ARANDELA	3					
4	90201–08612	WASHER, PLATE ARANDELA PLANA	1					
5	3AY–F6113–00	DAMPER AMORTIGUADOR	6					
6	4ST–F6129–00	WASHER ARANDELA	2					
7	3XA–F6213–00–P6	COVER, UPPER CUBIERTA SUPERIOR	1					UR DPBMC UR DPBMC
	3XA–F6213–00–P8	COVER, UPPER CUBIERTA SUPERIOR	1					UR VRC7 UR VRC7
	3XA–F6213–00–P2	COVER, UPPER CUBIERTA SUPERIOR	1					UR VDBM3 UR VDBM3
8	3XA–F6215–00–P7	COVER, LOWER CUBIERTA INFERIOR	1					UR DPBMC UR DPBMC
	3XA–F6215–00–P8	COVER, LOWER CUBIERTA INFERIOR	1					UR VRC7 UR VRC7
	3XA–F6215–00–P2	COVER, LOWER CUBIERTA INFERIOR	1					UR VDBM3 UR VDBM3
9	3XA–F622F–00	DAMPER, LOCATING 1 AMORTIGUADOR, DE UBICACION 1	1					
10	90167–04033	SCREW, TAPPING TORNILLO DE ROSCA HEMBRA	2					
11	97707–50016	SCREW, TAPPING TORNILLO ROSCA HEMBRA	3					
12	92907–10200	WASHER, PLAIN ARANDELA	2					
13	97707–50014	SCREW, TAPPING TORNILLO ROSCA HEMBRA	1					
14	90480–01321	GROMMET TAPON	1					
15	5GE–F6240–00	GRIP ASSY EMPUNADURA COMPLETA	1					
16	3TL–F6242–00	.GRIP (RIGHT) .EMPUNADURA (MD)	1					
17	3TL–F6241–00	GRIP EMPUNADURA	1					
18	4JF–F6280–00	REAR VIEW MIRROR ASSY (LEFT) ESPEJO COMPLETO (IZQUIERDO)	1					
19	4JF–F6290–00	REAR VIEW MIRROR ASSY (RIGHT) ESPEJO COMPLETO (DERECHO)	1					
20	3FS–F629T–00	BOOT 1 FUNDA 1	2					
21	3XA–F6326–01	GROMMET TAPON PROTECTOR	2					
22	3XA–F6129–00	WASHER ARANDELA	2					
23	4ST–F6311–00	CABLE, THROTTLE 1 CABLE DE ACELERADOR 1	1					

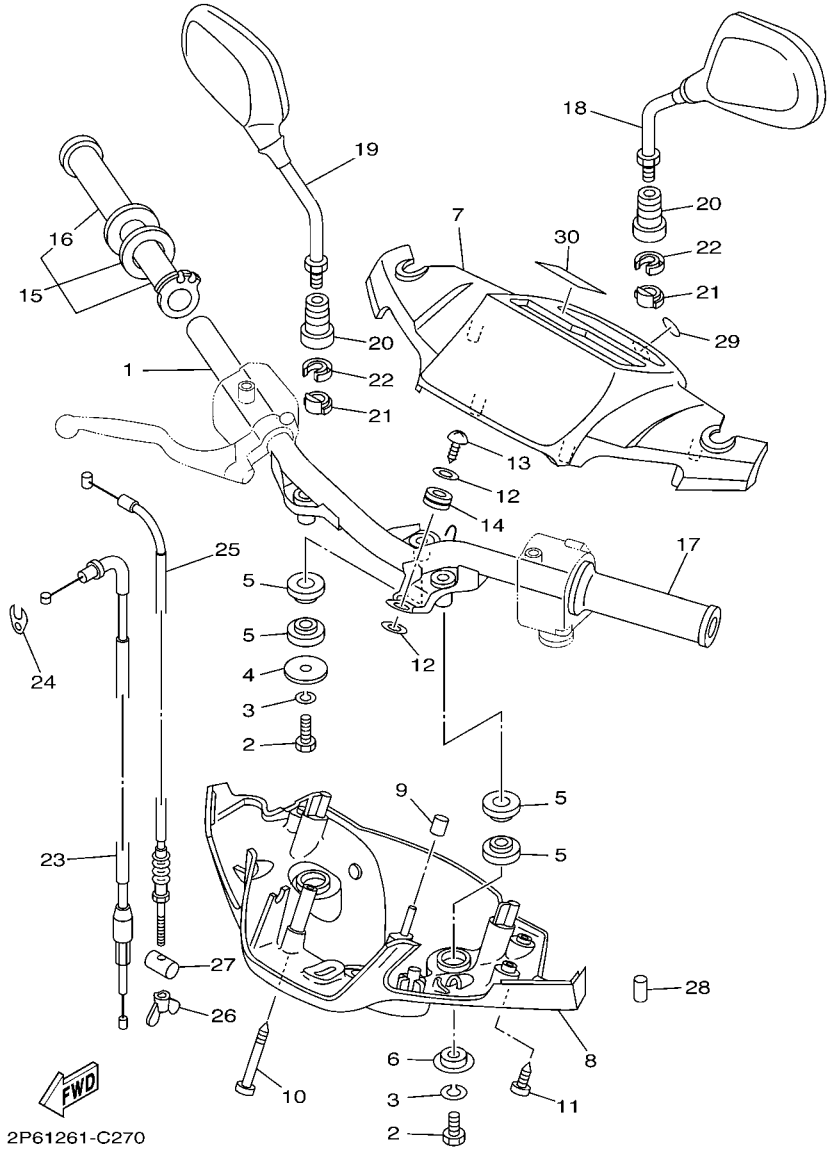

FIG. 27 STEERING HANDLE & CABLE MANILLAR & CABLE

REF. NO.	PART NO. CODIGO Nº	DESCRIPTION DESCRIPCION	2P61					REMARKS OBSERVACIONES
24	4ST–F6393–00	HOLDER SOPORTE	1					
25	3XA–F6341–00	CABLE, BRAKE CABLE DE FRENO	1					
26	90175–06013	NUT, WING TUERCA MARIPOSA	2					
27	90249–12008	PIN PASADOR	4					
28	4ST–F6331–00	CABLE, STARTER 1 CABLE DE ARRANQUE	1					
29	3XA–F622G–00	DAMPER, LOCATING AMORTIGUADOR DE MONTAJE	1					
30	4TR–2413B–00	EMBLEM EMBLEMA	1					

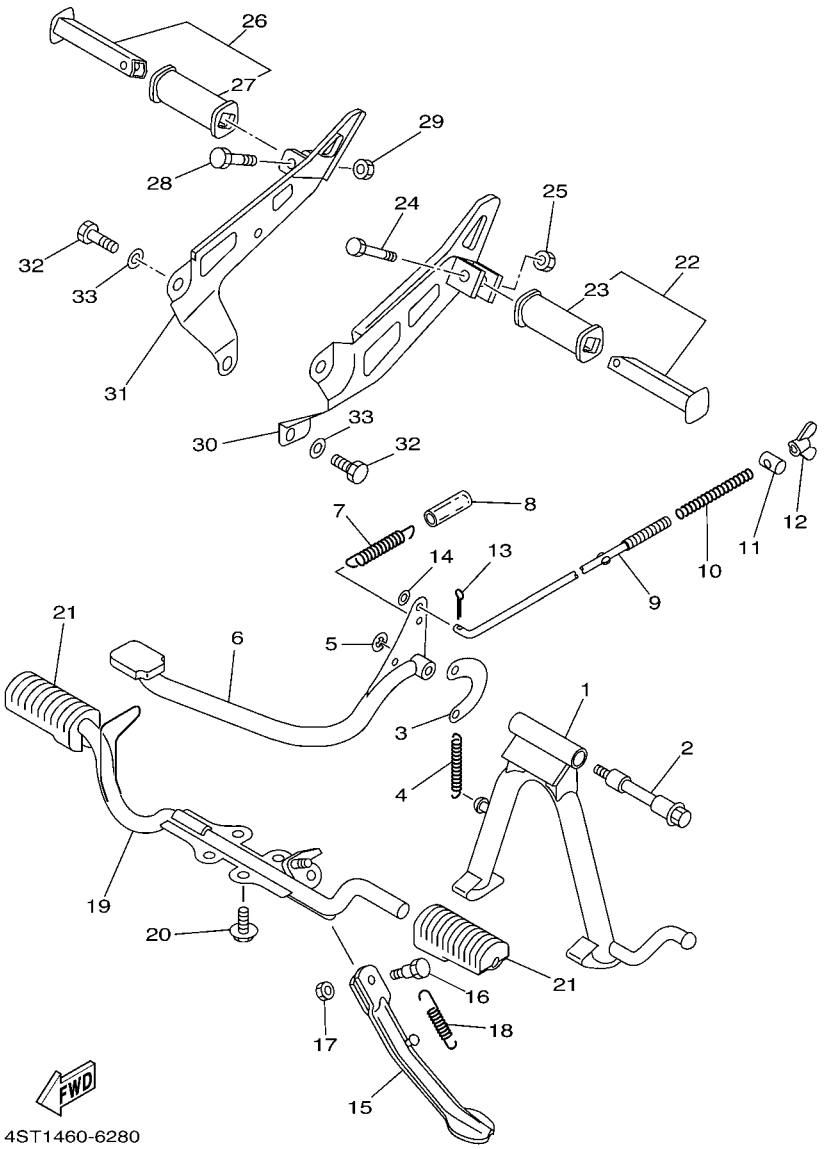

FIG. 28 STAND & FOOTREST — SOPORTE & APOYAPIE

REF. NO.	PART NO. CODIGO Nº	DESCRIPTION DESCRIPCION	2P61					REMARKS OBSERVACIONES
1	5GE–F7111–01	STAND, MAIN PUNTAL PRINCIPAL	1					
2	3XA–F7112–01	SHAFT, MAIN STAND EJE DE PUNTAL PRINCIPAL	1					
3	3NX–F7115–00	LINK, MAIN STAND CONEXION DE PUNTAL PRINCIPAL	1					
4	90506–29802	SPRING, TENSION RESORTE DE TENSION	1					
5	93430–12008	CIRCLIP SEGURO	1					
6	5GE–F7211–00	PEDAL, BRAKE PEDAL DE FRENO	1					
7	90506–20804	SPRING, TENSION RESORTE DE TENSION	1					
8	56L–27235–00	COVER, DUST CUBIERTA DE POLVO	1					
9	4ST–F7231–00	ROD, BRAKE VARILLA DE FRENO	1					
10	90501–10245	SPRING, COMPRESSION RESORTE DE COMPRESION	1					
11	90249–12008	PIN PASADOR	1					
12	90175–06013	NUT, WING TUERCA MARIPOSA	1					
13	91401–20012	PIN, COTTER PASADOR DE CHAVETA	1					
14	92907–06600	WASHER, PLATE ARANDELA	1					
15	2P6–F7311–00	STAND, SIDE PUNTAL LATERAL	1					
16	90109–08034	BOLT PERNO	1					
17	95307–08700	NUT TUERCA	1					
18	90506–20829	SPRING, TENSION RESORTE DE TENSION	1					
19	5GE–F7411–00	FOOTREST 1 APOYAPIE 1	1					
20	95827–08016	BOLT, FLANGE TUERCA DE REBORDE	4					
21	2ET–F7413–00	COVER, FOOTREST CUBIERTA DE APOYAPIE	2					
22	5GE–F7430–00	REAR FOOTREST ASSY 1 APOYAPIE POSTERIOR COMPLETO 1	1					
23	5GE–F7433–00	.COVER, REAR FOOTREST .CUBIERTA APOYAPIE TRASERO	1					
24	90109–066F1	BOLT PERNO	1					
25	95607–06100	NUT, U TUERCA AUTOBLOCANTE	1					
26	5GE–F7440–00	REAR FOOTREST ASSY 2 APOYAPIE POSTERIOR COMPLETO 2	1					
27	5GE–F7433–00	.COVER, REAR FOOTREST .CUBIERTA APOYAPIE TRASERO	1					

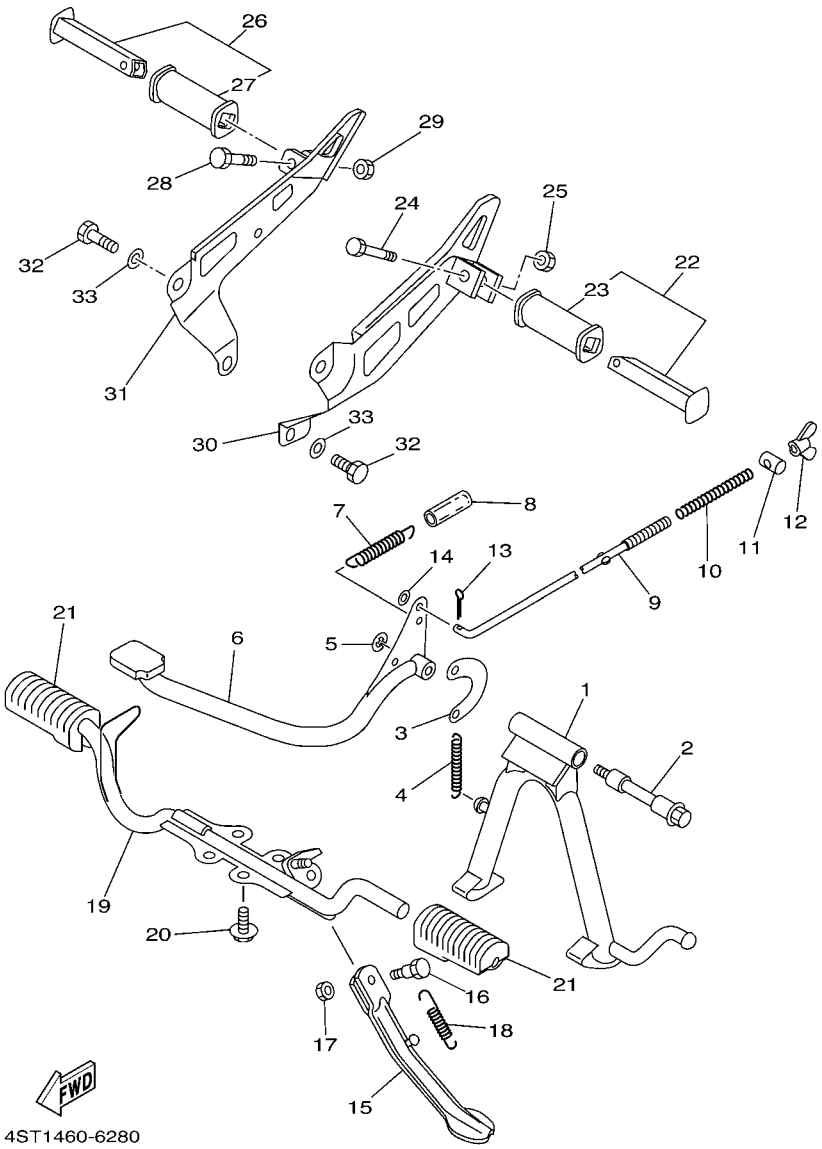

FIG. 28 STAND & FOOTREST SOPORTE & APOYAPIE

REF. NO.	PART NO. CODIGO Nº	DESCRIPTION DESCRIPCION	2P61					REMARKS OBSERVACIONES
28	90109–066F1	BOLT PERNO	1					
29	95607–06100	NUT, U TUERCA AUTOBLOCANTE	1					
30	3XA–F7452–00	BRACKET, FOOTREST 1 SOPORTE, DE APOYAPIE 1	1					
31	3XA–F7462–00	BRACKET, FOOTREST 2 SOPORTE, DE APOYAPIE 2	1					
32	97027–10020	BOLT PERNO	2					
33	92907–10600	WASHER, PLATE ARANDELA	2					

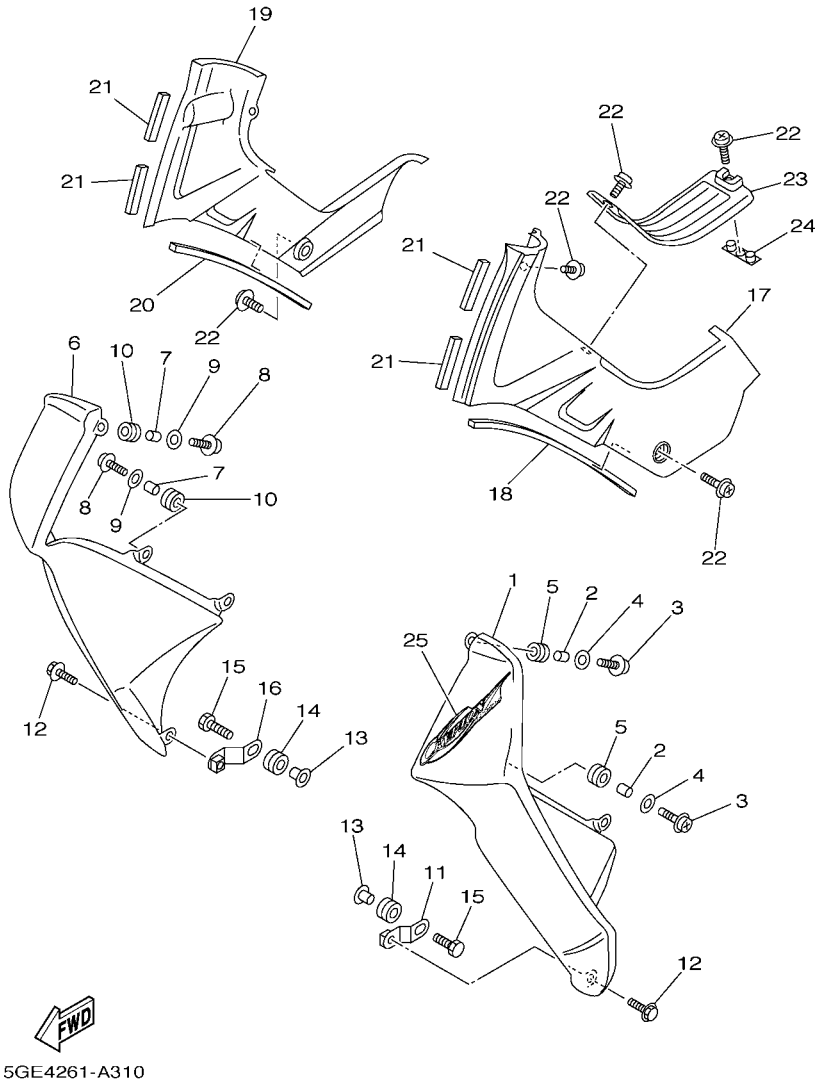

FIG. 29 LEG SHIELD — PATA PROTEGIDA

REF. NO.	PART NO. CODIGO Nº	DESCRIPTION DESCRIPCION	2P61					REMARKS OBSERVACIONES
1	4YS–F8311–01–P6	LEG SHIELD 1 PROTECCION DE PATA 1	1					UR DPBMC UR DPBMC
	4YS–F8311–01–P0	LEG SHIELD 1 PROTECCION DE PATA 1	1					UR VRC7 UR VRC7
	4YS–F8311–01–P7	LEG SHIELD 1 PROTECCION DE PATA 1	1					UR VDBM3 UR VDBM3
2	90387–060G7	COLLAR ESPACIADOR	2					
3	90159–06085	SCREW, WITH WASHER TORNILLO CON VALONA	2					
4	90201–06557	WASHER, PLATE ARANDELA PLANA	2					
5	90480–13398	GROMMET TAPON	2					
6	4YS–F8312–01–P6	LEG SHIELD 2 PROTECCION DE PATA 2	1					UR DPBMC UR DPBMC
	4YS–F8312–01–P0	LEG SHIELD 2 PROTECCION DE PATA 2	1					UR VRC7 UR VRC7
	4YS–F8312–01–P7	LEG SHIELD 2 PROTECCION DE PATA 2	1					UR VDBM3 UR VDBM3
7	90387–060G7	COLLAR ESPACIADOR	2					
8	90159–06085	SCREW, WITH WASHER TORNILLO CON VALONA	2					
9	90201–06557	WASHER, PLATE ARANDELA PLANA	2					
10	90480–13398	GROMMET TAPON	2					
11	4ST–F8321–00	STAY 1 SOPORTE	1					
12	95807–06014	BOLT, FLANGE TUERCA DE REBORDE	2					
13	90387–06803	COLLAR ESPACIADOR	2					
14	90480–13398	GROMMET TAPON	2					
15	97007–06020	BOLT PERNO	2					
16	4ST–F8322–00	STAY 2 SOPORTE 2	1					
17	4ST–F8385–00–P6	COVER, LOWER CUBIERTA INFERIOR	1					UR DPBMC UR DPBMC
	4ST–F8385–00–P7	COVER, LOWER CUBIERTA INFERIOR	1					UR VRC7 UR VRC7
	4ST–F8385–00–P2	COVER, LOWER CUBIERTA INFERIOR	1					UR VDBM3 UR VDBM3
18	4ST–F8435–00	DAMPER 4 AMORTIGUADOR 4	1					
19	4ST–F8395–00–P6	COVER, UNDER CUBIERTA INFERIOR	1					UR DPBMC UR DPBMC
	4ST–F8395–00–P7	COVER, UNDER CUBIERTA INFERIOR	1					UR VRC7 UR VRC7
	4ST–F8395–00–P2	COVER, UNDER CUBIERTA INFERIOR	1					UR VDBM3 UR VDBM3

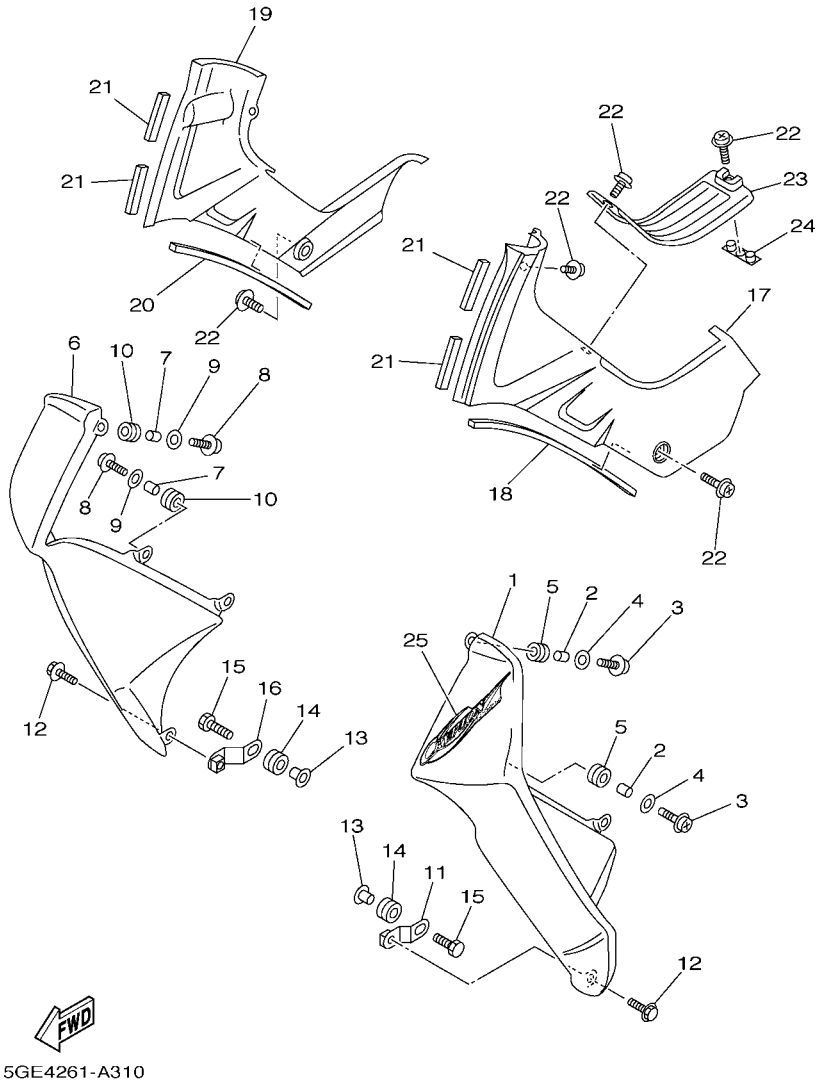

FIG. 29 LEG SHIELD — PATA PROTEGIDA

REF. NO.	PART NO. CODIGO Nº	DESCRIPTION DESCRIPCION	2P61					REMARKS OBSERVACIONES
20	4ST–F8435–00	DAMPER 4 AMORTIGUADOR 4	1					
21	56J–23398–00	MOLD, FRONT MOLDURA DELANTERA	4					
22	90159–06181	SCREW, WITH WASHER TORNILLO CON VALONA	5					
23	4ST–F834V–01	PROTECTOR 1 PROTECTOR 1	1					
24	3XA–F836T–01	DAMPER, LOCATING 1 AMORTIGUADOR DE MONTAJE 1	1					
25	5GE–F8391–20	GRAPHIC 1 CALCOMANIA DE BOVEDA 1	1					UR FOR DPBMC UR PARA DPBMC
	5GE–F8391–30	GRAPHIC 1 CALCOMANIA DE BOVEDA 1	1					UR FOR VRC7 UR PARA VRC7
	5GE–F8391–40	GRAPHIC 1 CALCOMANIA DE BOVEDA 1	1					UR FOR VDBM3 UR PARA VDBM3

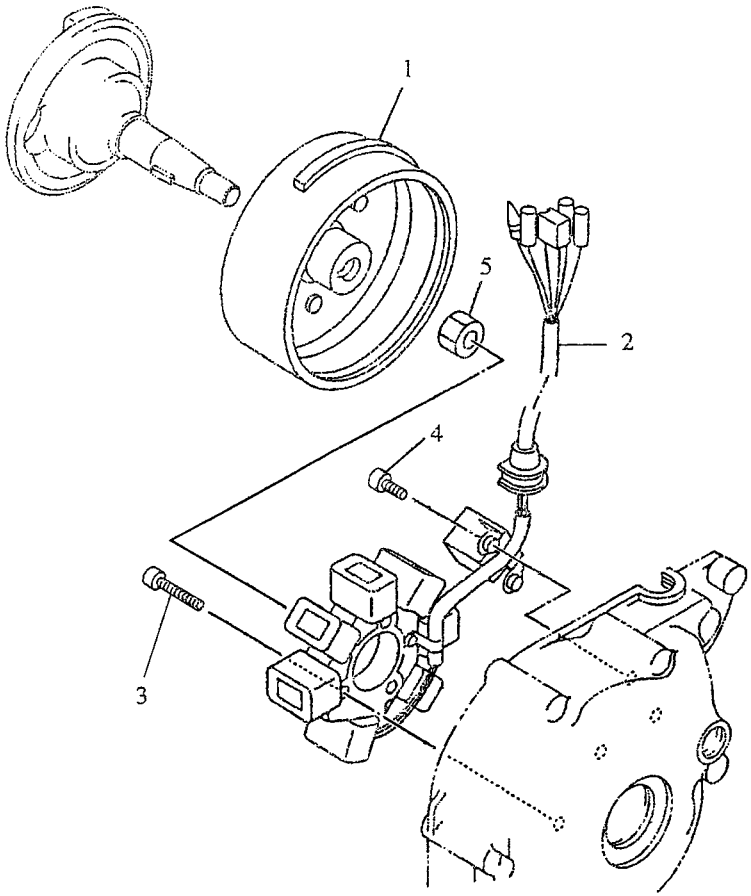

5AV4450-A300

FIG. 30 GENERATOR GENERADOR

REF. NO.	PART NO. CODIGO Nº	DESCRIPTION DESCRIPCION	2P61					REMARKS OBSERVACIONES
1	5AV–H5550–10	ROTOR ASSY ROTOR COMPLETO	1					
2	5AV–H5510–00	STATOR ASSY ESTATOR COMPLET	1					
3	91317–06025	BOLT PERNO	3					
4	91317–06014	BOLT PERNO	2					
5	95707–12500	NUT, FLANGE TUERCA DE BRIDA	1					

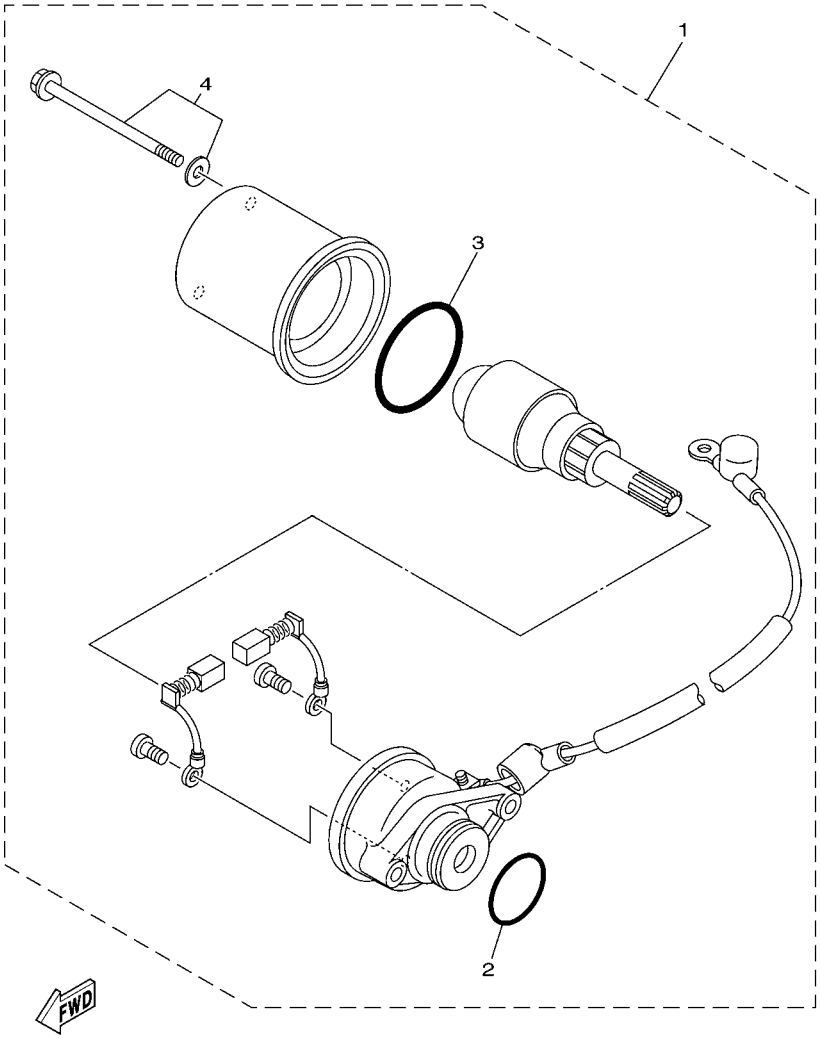

FIG. 31 STARTING MOTOR — MOTOR DE ARRANQUE

REF. NO.	PART NO. CODIGO Nº	DESCRIPTION DESCRIPCION	2P61					REMARKS OBSERVACIONES
1	5AV–H1800–00	STARTING MOTOR ASSY MOTOR DE ARRANQUE COMPLETO	1					
2	5AV–H182L–00	.O-RING 1 .ANILLO EN O	1					
3	5AV–H1861–00	.GASKET .EMPAQUETADURA	1					
4	5AV–H1828–00	.BOLT 2 .TORNILLO DE EMPUJE 2	1					

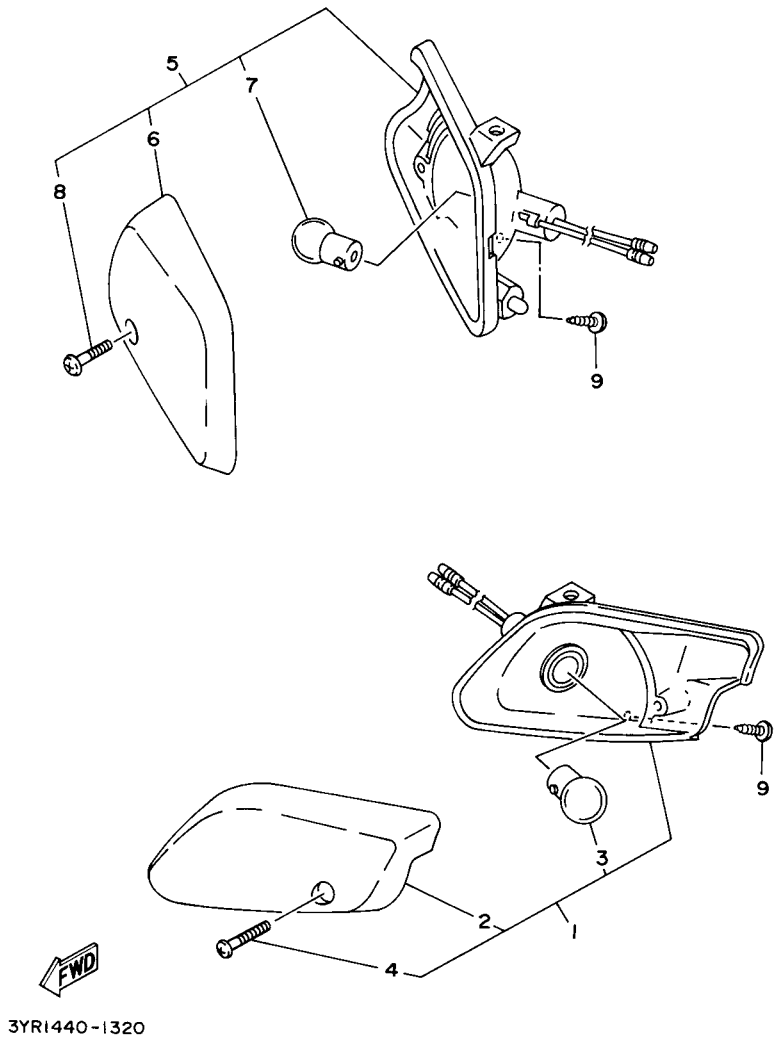

FIG. 32 FLASHER LIGHT LUZ DE DESTELLADOR

REF. NO.	PART NO. CODIGO Nº	DESCRIPTION DESCRIPCION	2P61					REMARKS OBSERVACIONES
1	3XA–H3310–00	FRONT FLASHER LIGHT ASSY 1 DESTELLADOR DE LUZ DELANT.	1					
2	3XA–H3312–00	.LENS, FLASHER .LENTE DE DESTELLADOR	1					
3	3XA–H3311–00	.BULB, FLASHER (12V-10W) .BOMBILLA (12V-10W)	1					
4	97706–40016	.SCREW, TAPPING .TORNILLO, ROSCA CHAPA	1					
5	3XA–H3320–01	FRONT FLASHER LIGHT ASSY 2 DESTELLADOR DE LUZ DELANT.	1					
6	3XA–H3322–00	.LENS, FLASHER 2 .LENTE DE INTERMITENTE 2	1					
7	3XA–H3311–00	.BULB, FLASHER (12V-10W) .BOMBILLA (12V-10W)	1					
8	97706–40016	.SCREW, TAPPING .TORNILLO, ROSCA CHAPA	1					LM LM
9	97707–40014	SCREW, TAPPING TORNILLO ROSCA HEMBRA	2					

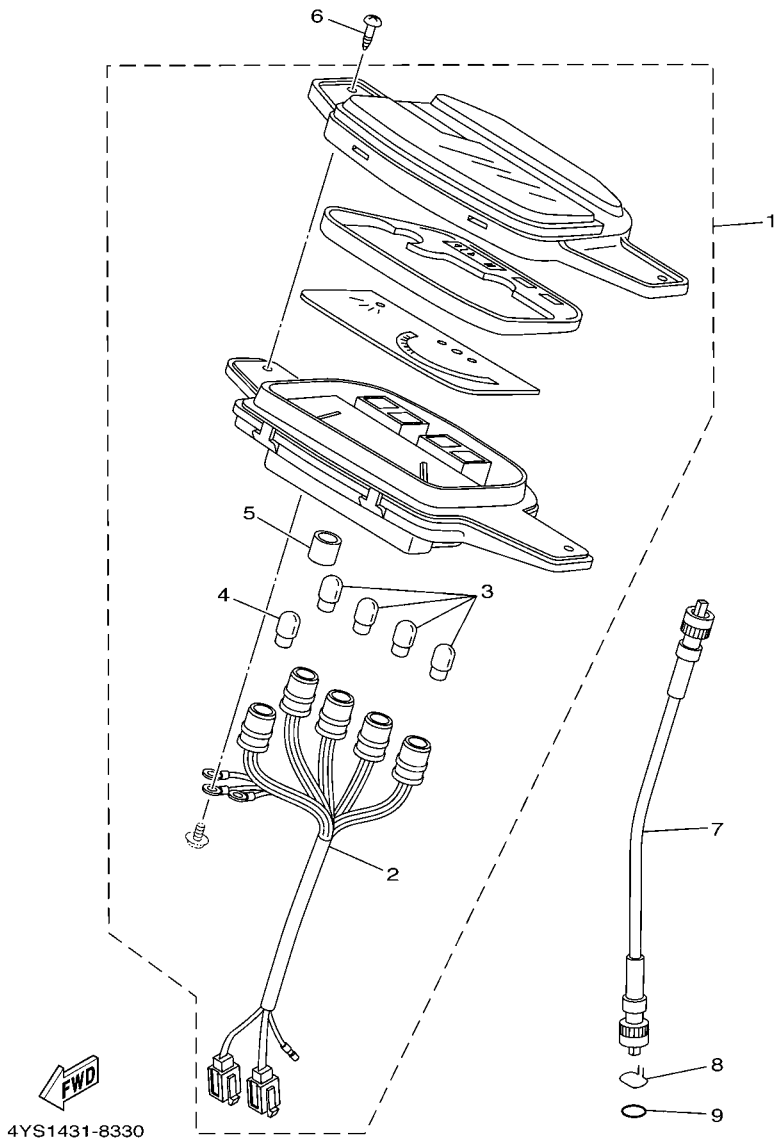

FIG. 33 METER MEDIDOR

REF. NO.	PART NO. CODIGO Nº	DESCRIPTION DESCRIPCION	2P61					REMARKS OBSERVACIONES
1	4ST–H3510–00	SPEEDOMETER ASSY VELOCIMETRO COMPL.	1					
2	4ST–H3509–00	.SOCKET CORD ASSY .ENCASTRE DE CABLE COMPLETO	1					
3	5R0–83517–V0	.BULB (12V-3.4W) .AMPOLLETA (12V-3.4W)	4					LM LM
4	3AY–83517–V0	.BULB (12V-1.7W) .AMPOLLETA (12V-1.7W)	1					LM LM
5	2XF–83781–V0	.TUBE .TUBO	1					
6	97707–50016	SCREW, TAPPING TORNILLO ROSCA HEMBRA	2					
7	3AY–H3550–00	SPEEDOMETER CABLE ASSY CABLE DE VELOCIMETRO COMPLETO	1					
8	2E9–25137–01	RING, STOP ANILLO DE TOPE	1					
9	93210–10010	O-RING ANILLO O	1					

FIG. 34 HEADLIGHT FARO DELANTERO

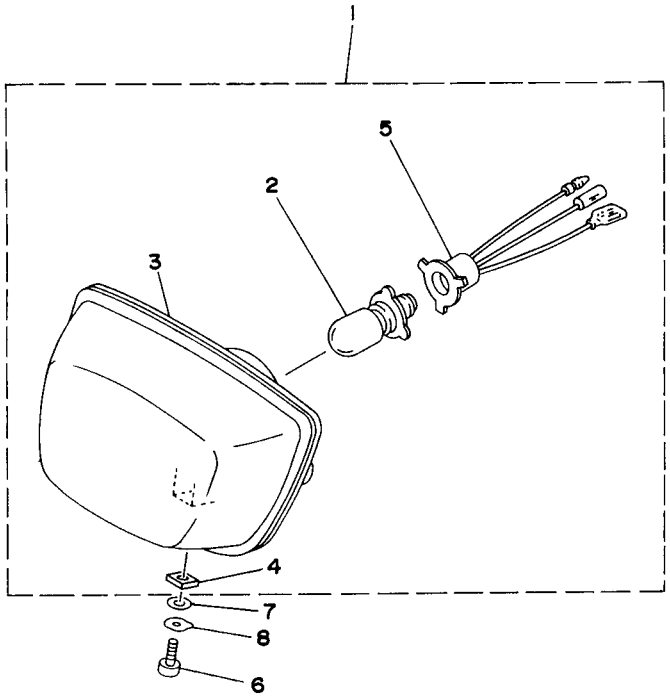

4ST1460-6340

REF. NO.	PART NO. CODIGO Nº	DESCRIPTION DESCRIPCION	2P61					REMARKS OBSERVACIONES
1	3XA–H4310–00	HEADLIGHT UNIT ASSY UNIDAD DE FARO DELANTERO COMPL	1					
2	3AY–84314–00	.BULB, HEADLIGHT (12V-30/30) .BOMBILLA (12V-30/30)	1					
3	3XA–H4120–00	.LENS ASSY .LENTES COMPLETO	1					
4	3XA–H4317–00	.NUT .TUERCA	1					
5	3AY–H4140–V0	.SOCKET CORD ASSY .ENCASTRE DE CABLE COMPLETO	1					
6	97007–06012	BOLT PERNO	1					
7	90201–06557	WASHER, PLATE ARANDELA PLANA	1					
8	90206–06088	WASHER, WAVE ARANDELA ONDULADA	1					

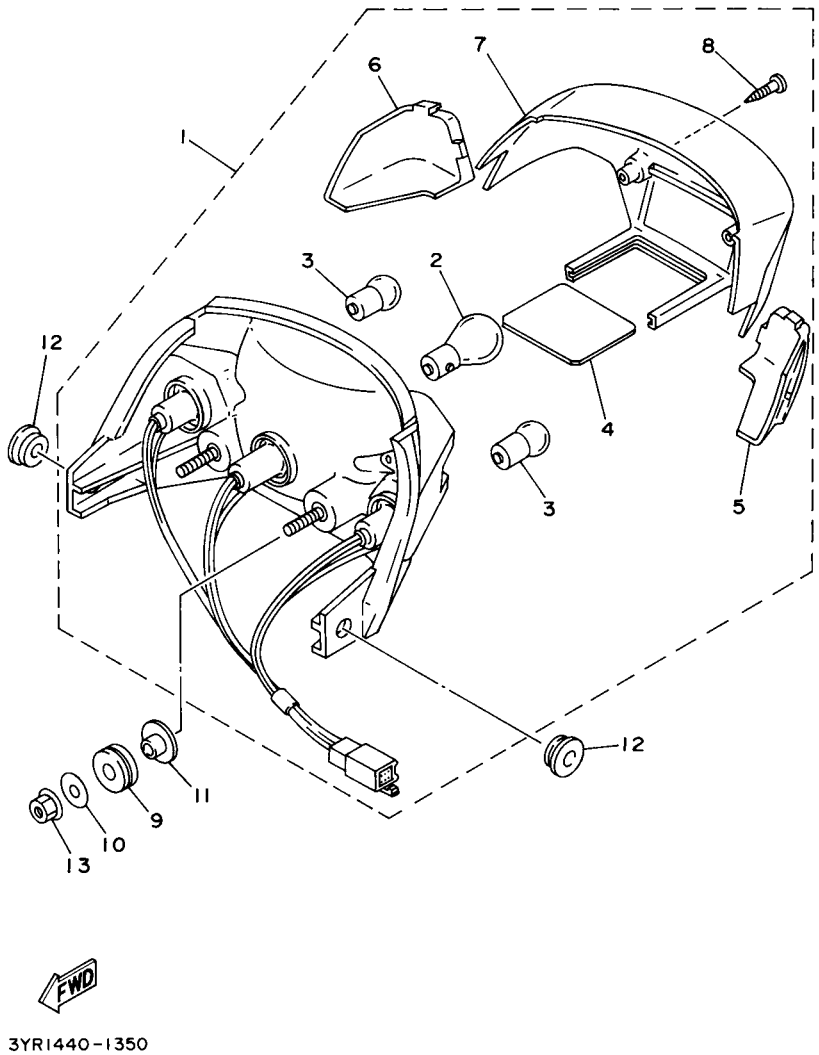

FIG. 35 TAILLIGHT — LUZ DE COLA

REF. NO.	PART NO. CODIGO Nº	DESCRIPTION DESCRIPCION	2P61					REMARKS OBSERVACIONES
1	3XA–H4710–00	TAILLIGHT UNIT ASSY CONJT. FARO TRASERO	1					
2	3XA–H4714–00	.BULB (12V 21/5W) .BOMBILLA (12V 21/5W)	1					
3	3XA–H3311–00	.BULB, FLASHER (12V-10W) .BOMBILLA (12V-10W)	2					
4	3XA–8472F–00	.LENS, LICENCE LIGHT .LENTE DE LUZ DE LICENCIA	1					
5	3XA–H3332–00	.LENS, FLASHER .LENTE DE DESTELLADOR	1					
6	3XA–H3342–00	.LENS, FLASHER 2 .LENTE DE DESTELLADOR	1					
7	3XA–H4721–00	.LENS, TAILLIGHT .LENTE DE FARO TRASERO	1					
8	97706–40625	.SCREW, TAPPING .TORNILLO, ROSCA CHAPA	2					
9	90480–18881	GROMMET TAPON	2					
10	90201–06071	WASHER, PLATE ARANDELA PLANA	2					
11	90387–066M1	COLLAR ESPACIADOR	2					
12	90480–13398	GROMMET TAPON	2					
13	95707–06500	NUT, FLANGE TUERCA DE BRIDA	2					

FIG. 36 HANDLE SWITCH & LEVER INTERRUPTOR DE MANILLAR&PALANC

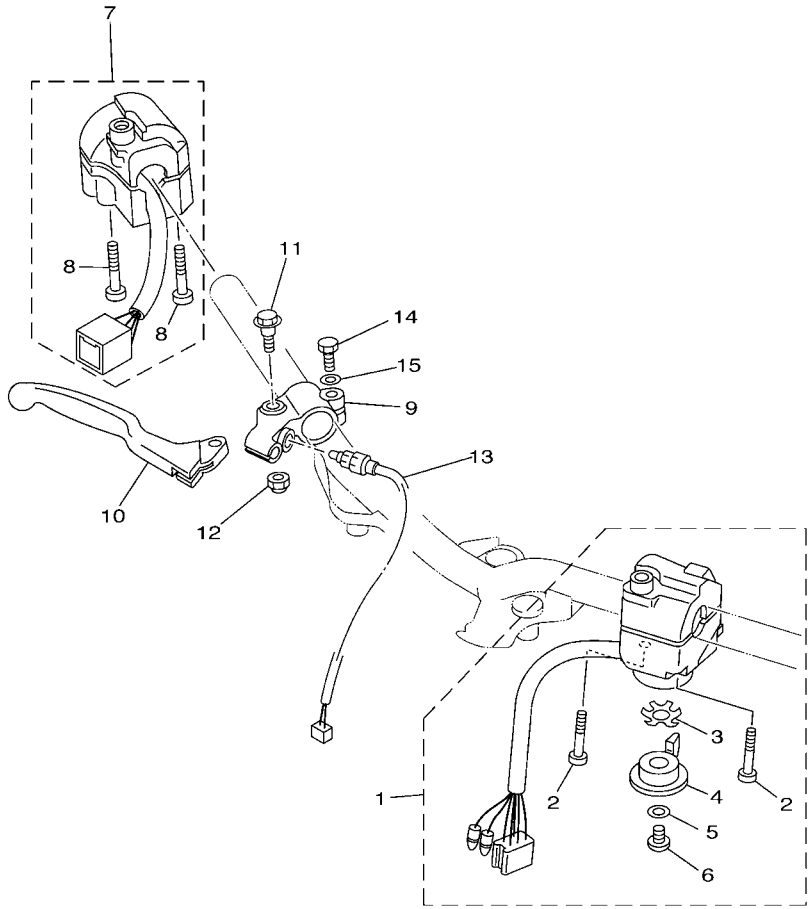

5DW1280-8360

REF. NO.	PART NO. CODIGO Nº	DESCRIPTION DESCRIPCION	2P61					REMARKS OBSERVACIONES
1	4ST–H3973–01	SWITCH, HANDLE 3 INTERRUPTOR DE MANIJA 3	1					
2	98506–05035	.SCREW, PAN HEAD .TORNILLO, DE CABEZA CRUZADA	2					
3	90209–10131	.WASHER .ARANDELA DE SEPARACION	1					
4	4ST–H3941–00	.LEVER, STARTER .PALANCA DE ARRANQUE	1					
5	92901–06200	.WASHER, PLAIN .ARANDELA PLANA	1					
6	98506–06008	.SCREW, PAN HEAD .TORNILLO, DE CABEZA CRUZADA	1					
7	3XA–H3975–00	SWITCH, HANDLE 2 INTERRUPTOR DE MANIJA 2	1					
8	98506–05040	.SCREW, PAN HEAD .TORNILLO, DE CABEZA CRUZADA	2					
9	4ST–H2921–01	HOLDER, LEVER 2 SOPORTE DE LEVA 2	1					
10	4ST–H3922–00	LEVER 2 PALANCA 2	1					
11	90109–06797	BOLT PERNO	1					
12	95607–06100	NUT, U TUERCA AUTOBLOCANTE	1					
13	4ST–H3980–00	FRONT STOP SWITCH ASSY INTERRUP. DE PARADA DELANTERO	1					
14	97007–06025	BOLT PERNO	1					
15	92907–06600	WASHER, PLATE ARANDELA	1					

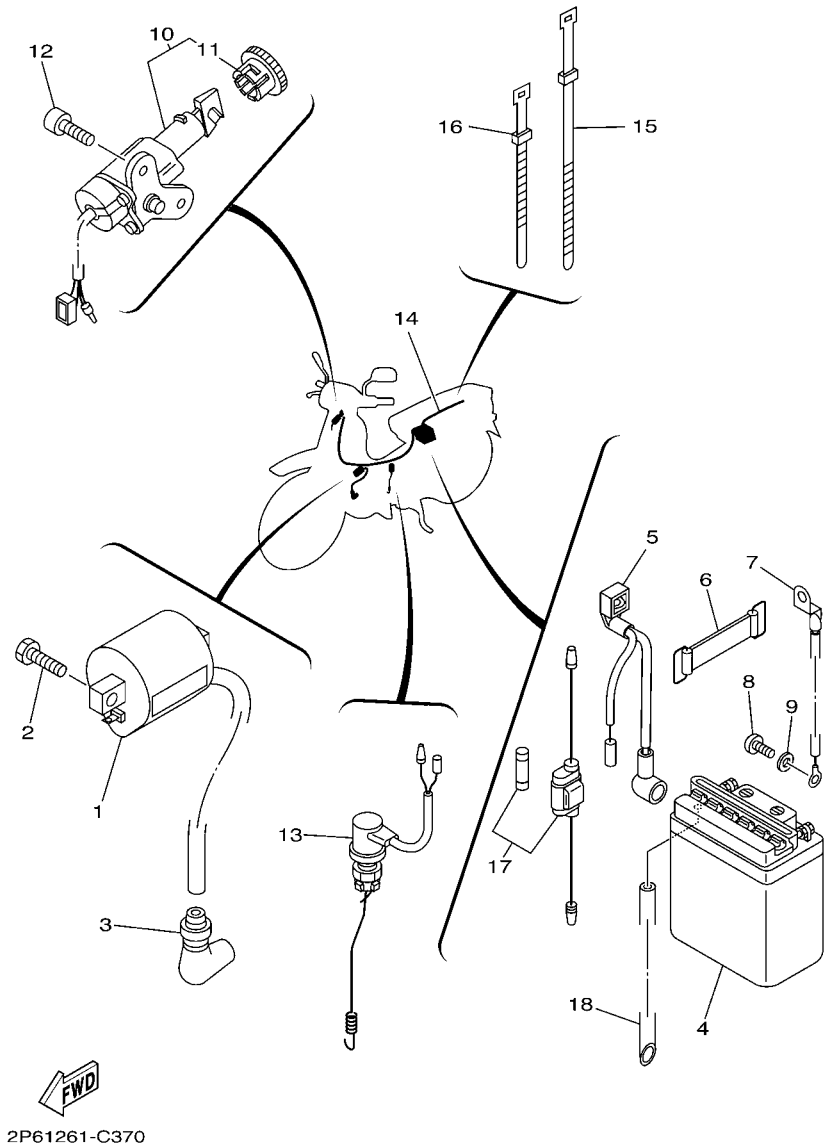

FIG. 37 ELECTRICAL 1 — EQUIPO ELECTRICO 1

REF. NO.	PART NO. CODIGO Nº	DESCRIPTION DESCRIPCION	2P61					REMARKS OBSERVACIONES
1	5AV–H2310–00	IGNITION COIL ASSY BOBINA DE ENCENDIDO COMPLETA	1					
2	97007–06016	BOLT PERNO	2					
3	5AV–H2370–00	PLUG CAP ASSY TAPON DE BUJIA COMPLT	1					
4	3AY–H2110–00	BATTERY ASSY (YB5L-B 12V-5AH) BATERIA COMPLETA YB5L-B12V-5AH	1					YUASA YUASA
5	4ST–H2115–00	WIRE, PLUS LEAD CABLE CONDUCTOR POSITIVO	1					
6	4ST–H2131–00	BAND, BATTERY TIRANTE DE BATERIA	1					
7	4ST–H2116–00	WIRE, MINUS LEAD CABLE CONDUCTOR NEGATIVO	1					
8	98507–05010	SCREW, PAN HEAD TORNILLO DE CABEZA CON PLANA	1					
9	92907–05600	WASHER, PLATE ARANDELA	1					
10	3AY–H2501–V0	MAIN SWITCH STEERING LOCK LLAVE DE IGNICION COMPLT	1					
11	2JH–82552–V0	.CAP, SWITCH .TAPA DE INTERRUPTOR	1					
12	91317–06012	BOLT PERNO	2					
13	4ST–H2530–01	STOP SWITCH ASSY INTERRUPTOR DE PARADA COMPLETO	1					
14	5GE–H2590–00	WIRE HARNESS ASSY CONJUNTO DE CABLES	1					
15	3AY–H3936–00	BAND, SWITCH CORD BANDA DE CABLE DE INTERRUPTOR	2					
16	3AY–H3936–10	BAND, SWITCH CORD BANDA DE CABLE DE INTERRUPTOR	3					
17	3KA–H2150–01	FUSE HOLDER ASSY PORTA-FUSIBLES COMPLETO	1					
18	90445–08170	HOSE (L330) TUBO (L330)	1					

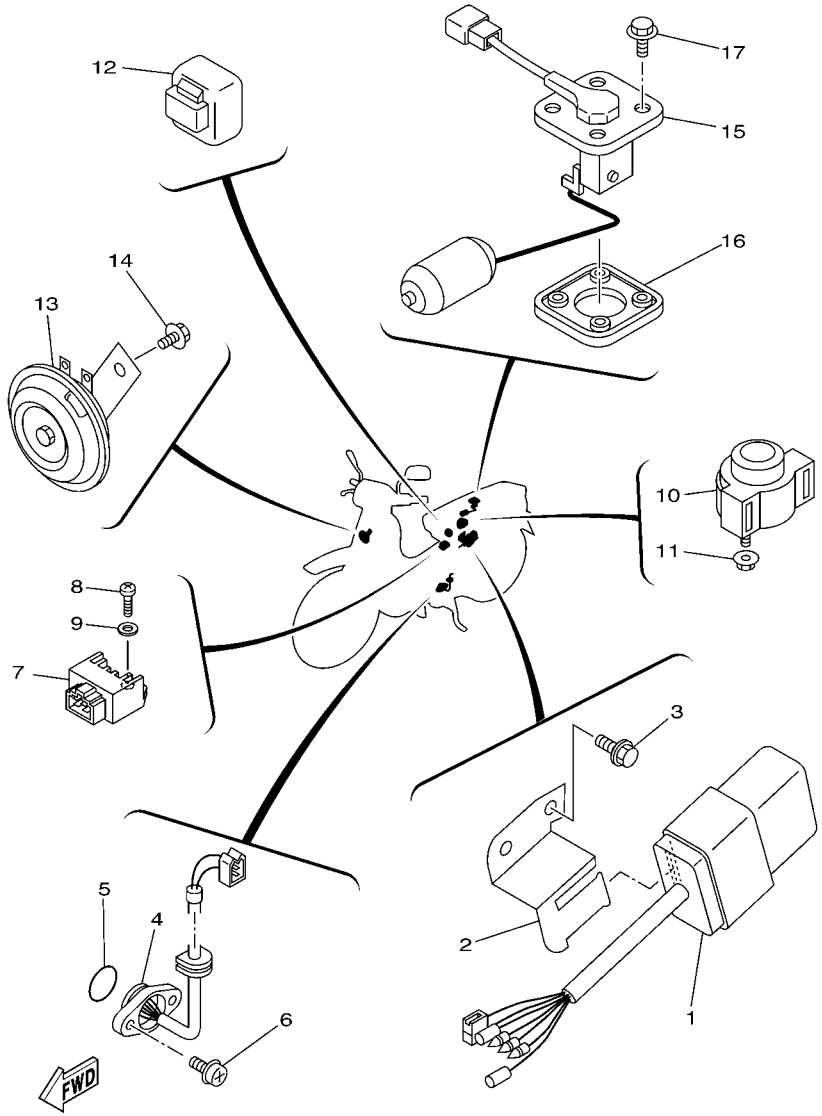

FIG. 38 ELECTRICAL 2 — EQUIPO ELECTRICO 2

REF. NO.	PART NO. CODIGO Nº	DESCRIPTION DESCRIPCION	2P61					REMARKS OBSERVACIONES
1	5AV–H5540–10	C.D.I. UNIT ASSY UNIDAD C.D.I. COMPLETA	1					
2	4GE–F1274–00	BRACKET, C.D.I. UNIT SOPORTE DE UNIDAD C.D.I.	1					
3	90119–06044	BOLT, WITH WASHER TORNILLO CON ARANDELA	1					
4	5AV–H2540–00	NEUTRAL SWITCH ASSY INTERRUPTOR NEUTRAL COMPL	1					
5	93210–22382	O-RING ANILLO O	1					
6	97607–05216	SCREW,WITH WASHER TORNILLO CAB CON PLANA C/ARAN	2					
7	4CK–81960–01	RECTIFIER & REGULATOR ASSY RECTIFICADOR Y REGULADOR	1					
8	98507–06016	SCREW, PAN HEAD TORNILLO DE CABEZA CON PLANA	1					
9	92907–06600	WASHER, PLATE ARANDELA	1					
10	4ST–H1940–00	STARTER RELAY ASSY CONJUNTO ARRANCADOR RELEVO	1					
11	95707–06500	NUT, FLANGE TUERCA DE BRIDA	2					
12	3WE–H3350–00	FLASHER RELAY ASSY RELE DE DESTELLADOR COMPL.	1					
13	3AY–H3371–V0	HORN BOCINA	1					
14	95807–06010	BOLT, FLANGE TUERCA DE REBORDE	1					
15	2JG–85752–00	SENDER UNIT ASSY, FUEL METER UNIDAD TRANSM. MED. COMBUST.	1					
16	5G3–85753–00	GASKET, SENDER UNIT EMPAQUE DE UNIDAD TRANSMISORA	1					
17	90119–05071	BOLT, WITH WASHER TORNILLO CON ARANDELA	4					

NUMERICAL INDEX
INDICE NUMERICO

PART NO. CODIGO Nº	REF. NO.
4SV–12119–00	3 – 3
2JG–16324–00	13 – 15
4ST–16586–00	13 – 5
4ST–16611–00	13 – 2
2JG–21638–00	18 – 18
2JG–2171M–10	19 – 5
	19 – 10
307–22123–00	20 – 2
4ST–23108–00	21 – 13
56J–23398–00	21 – 18
	29 – 21
156–23411–00	22 – 31
22F–23411–01	21 – 4
156–23412–00	21 – 1
22F–23412–01	21 – 3
22F–23416–00	21 – 6
4TR–2413B–00	27 – 30
5DW–24311–00	23 – 9
5DW–24312–00	23 – 10
5DW–24313–00	23 – 11
5HV–24500–00	23 – 13
5BM–24514–00	23 – 2
22F–24610–10	23 – 16
3T5–24612–10	23 – 17
3L7–24724–00	24 – 5
2JG–25135–00	25 – 12
2T4–25137–00	25 – 17
2E9–25137–01	33 – 8
2JG–25138–00	25 – 13
183–25149–00	25 – 15
56L–27235–00	28 – 8
4CK–81960–01	38 – 7
2JH–82552–V0	37 – 11
3AY–83517–V0	33 – 4
5R0–83517–V0	33 – 3
2XF–83781–V0	33 – 5
3AY–84314–00	34 – 2
3XA–8472F–00	35 – 4
2JG–85752–00	38 – 15
5G3–85753–00	38 – 16
5AV–E1102–01	1 – 1
5AV–E111F–00	4 – 5
5AV–E1134–00	1 – 2
5AV–E1161–00	1 – 5
5AV–E1166–00	9 – 6
5AV–E1181–00	1 – 14
5AV–E1185–00	1 – 6
5AV–E1186–00	1 – 9

PART NO. CODIGO Nº	REF. NO.
5AV–E1198–00	5 – 8
5AV–E1311–00	1 – 17
5AV–E1351–01	1 – 19
5AV–E1400–20	2 – 1
5AV–E1412–00	2 – 2
5AV–E1422–00	2 – 6
5AV–E1500–00	2 – 14
5AV–E1536–00	2 – 7
5AV–E1610–00	2 – 13
5AV–E1631–01	2 – 10
5AV–E1633–00	2 – 11
5AV–E1651–00	2 – 5
5AV–E1681–00	2 – 3
5AV–E2111–00	3 – 1
5AV–E2114–00	3 – 4
5AV–E2117–00	3 – 6
5AV–E2118–00	3 – 5
5AV–E2121–00	3 – 2
5AV–E2126–00	3 – 7
5AV–E2151–00	3 – 8
5AV–E2156–00	3 – 11
5AV–E2159–00	3 – 9
5AV–E2170–00	4 – 1
5AV–E2171–00	4 – 2
5AV–E2176–00	4 – 8
5AV–E2190–00	4 – 11
5AV–E2210–00	4 – 15
5AV–E2213–00	4 – 16
5AV–E2231–00	4 – 12
5AV–E2241–00	4 – 13
5AV–E3300–00	5 – 1
5AV–E3324–00	5 – 10
5AV–E3325–00	5 – 2
5AV–E3329–00	5 – 5
5AV–E3411–00	5 – 9
5AV–E3451–00	5 – 11
5AV–E3586–01	6 – 1
5AV–E3595–01	6 – 2
5AV–E4103–00	7 – 20
5AV–E4104–00	7 – 21
5AV–E410A–00	7 – 11
5AV–E4118–00	7 – 23
5AV–E4197–00	7 – 24
2P6–E4301–00	7 – 1
5AV–E4312–25	7 – 17
5AV–E4323–00	7 – 6
5AV–E4331–00	7 – 4
5AV–E4335–00	7 – 12

PART NO. CODIGO Nº	REF. NO.
5AV–E4341–00	7 – 16
5AV–E4342–00	7 – 18
14T–E4343–45	7 – 15
4FP–E4349–00	7 – 8
5AV–E4384–00	7 – 2
5AV–E4385–00	7 – 3
6E5–E4386–01	7 – 9
5AV–E4390–00	7 – 22
5AV–E4411–00	6 – 8
5AV–E4412–00	6 – 10
5AV–E4423–00	6 – 13
5AV–E4433–00	6 – 14
5AV–E443E–00	6 – 18
5AV–E4451–00	6 – 9
5AV–E4452–00	6 – 12
5AV–E4453–00	6 – 11
5AV–E4472–00	6 – 15
214–E4513–00	7 – 10
4JP–E4561–00	7 – 13
5AV–E4594–00	7 – 14
5AV–E4610–00	8 – 1
5AV–E4613–00	8 – 8
5AV–E4628–00	8 – 2
5AV–E4651–00	1 – 4
5AV–E4766–00	8 – 3
5AV–E4781–00	8 – 6
5AV–E490J–00	7 – 19
5AV–E5111–00	9 – 1
5AV–E5113–00	10 – 11
5AV–E5121–00	9 – 2
5AV–E5316–00	9 – 5
5AV–E5362–00	10 – 18
5AV–E5371–00	9 – 3
5AV–E5411–00	10 – 1
5AV–E5418–00	10 – 12
5AV–E5421–10	10 – 15
5AV–E5436–00	10 – 21
5AV–E5451–10	10 – 2
5AV–E5461–00	10 – 16
5AV–E5492–00	10 – 14
5AV–E5512–00	12 – 1
5AV–E5524–00	12 – 3
5AV–E5580–20	12 – 5
5AV–E5583–00	12 – 6
5AV–E5618–00	11 – 12
5AV–E5620–00	11 – 11
5AV–E5641–00	11 – 2
5AV–E5644–00	11 – 6

PART NO. CODIGO Nº	REF. NO.
5AV–E5644–00	12 – 4
5AV–E5660–10	11 – 1
5AV–E5664–00	11 – 10
5AV–E5664–10	11 – 9
5AV–E5671–00	11 – 4
5AV–E6150–00	13 – 13
5AV–E6321–00	13 – 16
5AV–E6351–00	13 – 17
5AV–E6356–00	13 – 25
5AV–E6357–00	13 – 24
5AV–E6371–00	13 – 14
5AV–E6512–00	13 – 4
5AV–E6620–00	13 – 8
5AV–E6626–00	13 – 9
5AV–E7121–00	14 – 6
5AV–E7131–00	14 – 2
5AV–E7141–00	14 – 3
5AV–E7211–00	14 – 13
5AV–E7231–00	14 – 12
5AV–E7241–00	14 – 11
5AV–E7402–00	14 – 10
5AV–E7411–00	14 – 1
5AV–E8101–00	16 – 1
5AV–E8110–00	16 – 23
5AV–E8120–00	15 – 4
5AV–E8140–00	16 – 8
5AV–E8152–00	16 – 2
5AV–E8172–00	16 – 15
5AV–E8179–00	16 – 13
5AV–E817A–00	16 – 19
5AV–E8181–00	16 – 14
5AV–E8186–00	16 – 20
5AV–E8511–00	15 – 6
5AV–E8512–00	15 – 7
5AV–E8531–00	15 – 5
5AV–E8531–10	16 – 18
5AV–E8540–00	15 – 1
5AV–E8542–00	15 – 2
5GE–F1110–01	17 – 1
4ST–F117F–00	17 – 6
4ST–F117G–01	17 – 10
4ST–F117N–00	17 – 12
4GE–F1274–00	38 – 2
3XA–F1398–00	24 – 21
4ST–F139R–00	17 – 5
4ST–F139X–10	17 – 7
3XA–F1511–00–P2	18 – 1
3XA–F1511–00–PB	18 – 1

PART NO. CODIGO Nº	REF. NO.
3XA–F1511–00–PC	18 – 1
4ST–F1518–00	18 – 6
5GE–F160E–00	18 – 19
3XA–F1611–00	18 – 7
4ST–F1629–00	18 – 16
5GE–F1685–00	18 – 13
3XA–F1711–00–P2	19 – 1
3XA–F1711–00–P9	19 – 1
3XA–F1711–00–PA	19 – 1
3XA–F171E–00–P2	19 – 27
3XA–F171E–00–P9	19 – 27
3XA–F171E–00–PA	19 – 27
3XA–F1721–00–P2	19 – 6
3XA–F1721–00–P9	19 – 6
3XA–F1721–00–PA	19 – 6
3XA–F1731–00–P2	19 – 11
3XA–F1731–00–P9	19 – 11
3XA–F1731–00–PA	19 – 11
5GE–F173E–20	19 – 31
5GE–F173E–30	19 – 31
5GE–F173E–40	19 – 31
5GE–F173F–20	19 – 33
5GE–F173F–30	19 – 33
5GE–F173F–40	19 – 33
3XA–F1741–00–P2	19 – 22
3XA–F1741–00–P9	19 – 22
3XA–F1741–00–PA	19 – 22
3XA–F174X–01	19 – 13
3XA–F174Y–00	19 – 28
5GE–F2110–00	20 – 1
5GE–F2141–10	20 – 4
4ST–F2151–00	20 – 3
4ST–F2210–00	20 – 13
5GE–F2310–10	20 – 7
4ST–F2315–00	20 – 12
4ST–F3100–10	22 – 1
4ST–F3102–00	22 – 2
4ST–F3102–10	22 – 2
4ST–F3103–00	22 – 16
4ST–F3103–10	22 – 16
2JG–F3110–00	22 – 6
	22 – 20
2JG–F3111–00	22 – 14
	22 – 28
3XA–F3122–00–P2	21 – 8
3XA–F3122–00–P9	21 – 8
3XA–F3122–00–PA	21 – 8
2JG–F3126–00–WN	22 – 3

PART NO. CODIGO Nº	REF. NO.
3XA–F3132–00–P2	21 – 9
3XA–F3132–00–P9	21 – 9
3XA–F3132–00–PA	21 – 9
2JG–F3136–00–WN	22 – 17
4ST–F3141–00	22 – 12
	22 – 26
2JG–F3144–00	22 – 11
	22 – 25
2JG–F3145–00	22 – 4
	22 – 18
2JG–F3147–00	22 – 10
	22 – 24
2JG–F3152–00	22 – 8
	22 – 22
1T8–F3156–00	22 – 5
	22 – 19
2JG–F3157–00	22 – 9
	22 – 23
509–F3158–L0	22 – 13
	22 – 27
3SB–F3170–00	22 – 7
	22 – 21
278–F3181–50	22 – 15
	22 – 29
5GE–F331A–00	21 – 22
3YR–F3340–00	22 – 30
3YR–F3346–00	22 – 32
4ST–F3391–00–P2	21 – 12
4ST–F3391–00–P8	21 – 12
4ST–F3391–00–P9	21 – 12
4ST–F3461–00	21 – 19
5GE–F4110–00	23 – 1
5DW–F4141–00	23 – 18
5GE–F470F–00	24 – 2
3XA–F4726–00	24 – 7
5GE–F4728–00	24 – 12
3XA–F472E–01	24 – 6
5GE–F4730–00	24 – 1
5GE–F4741–00	24 – 3
3AY–F4742–00	24 – 17
3XA–F4744–00	24 – 8
3AY–F4763–00	24 – 4
3XA–F4773–00	24 – 16
3AY–F4780–V0	24 – 14
3AY–F4796–00	24 – 20
23T–F5104–00	25 – 6
3AY–F5111–01–WN	25 – 1
4ST–F5115–01	25 – 2

NUMERICAL INDEX
INDICE NUMERICO

PART NO. CODIGO Nº	REF. NO.
3AY–F5121–00–WN	25 – 8
5GE–F5155–00	25 – 18
5GE–F5181–10	25 – 27
5GE–F5183–00	25 – 26
23T–F5304–01	26 – 8
5TP–F530K–00	26 – 11
23T–F5311–01	26 – 1
4ST–F5315–00	26 – 2
23T–F5321–02–WN	26 – 10
23T–F5330–00	25 – 10
4ST–F533A–00	25 – 22
	26 – 17
3Y6–F5351–00	25 – 21
	26 – 13
5GE–F5355–00	26 – 14
5GE–F5364–00	26 – 7
37J–F5366–02	26 – 18
59L–F5371–00	26 – 42
3AY–F5381–01	26 – 29
5GE–F5387–00	26 – 19
4JE–F5388–00	26 – 35
4JE–F5389–00	26 – 36
4JF–F5412–10	26 – 23
5GE–F5437–00	26 – 22
3AY–F6113–00	27 – 5
3XA–F6129–00	27 – 22
4ST–F6129–00	27 – 6
3XA–F6210–00	27 – 1
3XA–F6213–00–P2	27 – 7
3XA–F6213–00–P6	27 – 7
3XA–F6213–00–P8	27 – 7
3XA–F6215–00–P2	27 – 8
3XA–F6215–00–P7	27 – 8
3XA–F6215–00–P8	27 – 8
3XA–F622F–00	19 – 12
	19 – 23
	27 – 9
3XA–F622G–00	27 – 29
5GE–F6240–00	27 – 15
3TL–F6241–00	27 – 17
3TL–F6242–00	27 – 16
4JF–F6280–00	27 – 18
4JF–F6290–00	27 – 19
3FS–F629T–00	27 – 20
4ST–F6311–00	27 – 23
3XA–F6326–01	27 – 21
4ST–F6331–00	27 – 28
3XA–F6341–00	27 – 25

PART NO. CODIGO Nº	REF. NO.
4ST–F6393–00	27 – 24
5GE–F7111–01	28 – 1
3XA–F7112–01	28 – 2
5AV–F7114–00	8 – 5
3NX–F7115–00	28 – 3
5GE–F7211–00	28 – 6
4ST–F7231–00	28 – 9
2P6–F7311–00	28 – 15
5GE–F7411–00	28 – 19
2ET–F7413–00	28 – 21
5GE–F7430–00	28 – 22
5GE–F7433–00	28 – 23
	28 – 27
5GE–F7440–00	28 – 26
3XA–F7452–00	28 – 30
3XA–F7462–00	28 – 31
5GE–F8100–00	17 – 13
4YS–F8311–01–P0	29 – 1
4YS–F8311–01–P6	29 – 1
4YS–F8311–01–P7	29 – 1
4YS–F8312–01–P0	29 – 6
4YS–F8312–01–P6	29 – 6
4YS–F8312–01–P7	29 – 6
4ST–F8321–00	29 – 11
4ST–F8322–00	29 – 16
4ST–F834V–01	29 – 23
3XA–F836T–01	29 – 24
4ST–F8385–00–P2	29 – 17
4ST–F8385–00–P6	29 – 17
4ST–F8385–00–P7	29 – 17
5GE–F8391–20	29 – 25
5GE–F8391–30	29 – 25
5GE–F8391–40	29 – 25
4ST–F8395–00–P2	29 – 19
4ST–F8395–00–P6	29 – 19
4ST–F8395–00–P7	29 – 19
4ST–F8435–00	29 – 18
	29 – 20
5AV–H1800–00	31 – 1
5AV–H1828–00	31 – 4
5AV–H182L–00	31 – 2
5AV–H1861–00	31 – 3
4ST–H1940–00	38 – 10
3AY–H2110–00	37 – 4
4ST–H2115–00	37 – 5
4ST–H2116–00	37 – 7
4ST–H2131–00	37 – 6
3KA–H2150–01	37 – 17

PART NO. CODIGO Nº	REF. NO.
5AV–H2310–00	37 – 1
5AV–H2370–00	37 – 3
3AY–H2501–V0	37 – 10
4ST–H2530–01	37 – 13
5AV–H2540–00	38 – 4
5GE–H2590–00	37 – 14
4ST–H2921–01	36 – 9
3XA–H3310–00	32 – 1
3XA–H3311–00	32 – 3
	32 – 7
	35 – 3
3XA–H3312–00	32 – 2
3XA–H3320–01	32 – 5
3XA–H3322–00	32 – 6
3XA–H3332–00	35 – 5
3XA–H3342–00	35 – 6
3WE–H3350–00	38 – 12
3AY–H3371–V0	38 – 13
4ST–H3509–00	33 – 2
4ST–H3510–00	33 – 1
3AY–H3550–00	33 – 7
4ST–H3922–00	36 – 10
3AY–H3936–00	37 – 15
3AY–H3936–10	37 – 16
4ST–H3941–00	36 – 4
4ST–H3973–01	36 – 1
3XA–H3975–00	36 – 7
4ST–H3980–00	36 – 13
3XA–H4120–00	34 – 3
3AY–H4140–V0	34 – 5
3XA–H4310–00	34 – 1
3XA–H4317–00	34 – 4
3XA–H4710–00	35 – 1
3XA–H4714–00	35 – 2
3XA–H4721–00	35 – 7
5AV–H5510–00	30 – 2
5AV–H5540–10	38 – 1
5AV–H5550–10	30 – 1
90101–06278	25 – 19
	26 – 15
90101–08590	4 – 10
90105–08024	17 – 2
90105–10036	21 – 20
90105–10778	20 – 17
90109–065E0	24 – 10
90109–066F1	28 – 24
	28 – 28
90109–06797	36 – 11

PART NO. CODIGO Nº	REF. NO.
90109–08034	28 – 16
90109–08183	26 – 43
90109–08361	26 – 24
90116–08597	9 – 13
90119–05001	13 – 19
90119–05071	38 – 17
90119–06044	18 – 8
	18 – 17
	24 – 9
	38 – 3
90149–06184	17 – 8
90150–06037	21 – 26
90155–06007	5 – 6
90159–06064	24 – 15
90159–06067	19 – 2
	19 – 7
90159–06085	19 – 19
	29 – 3
	29 – 8
90159–06181	29 – 22
90167–04033	27 – 10
90167–05025	19 – 18
	19 – 30
90170–05302	3 – 10
90170–18165	26 – 34
90175–06013	27 – 26
	28 – 12
90176–08026	1 – 12
90179–08168	26 – 25
90179–12659	13 – 11
90179–14469	13 – 23
90179–25033	21 – 7
90183–04005	21 – 14
90183–050A1	19 – 17
	19 – 29
90185–10091	25 – 28
90185–10154	21 – 21
90185–12046	20 – 5
	26 – 30
90201–06071	35 – 10
90201–061A5	26 – 38
90201–064K6	23 – 7
90201–064L6	25 – 14
90201–06557	18 – 11
	29 – 4
	29 – 9
	34 – 7
90201–08326	4 – 9

PART NO. CODIGO Nº	REF. NO.
90201–08609	1 – 11
90201–08612	27 – 4
90201–086P8	17 – 3
90201–08766	23 – 8
90201–087F0	26 – 46
90201–101J1	25 – 29
90201–10591	13 – 26
90201–106F2	20 – 16
90201–12166	14 – 7
90201–12190	20 – 15
90201–122H1	13 – 10
90201–12688	26 – 31
90201–126A7	16 – 17
90201–127F4	16 – 10
90201–15700	14 – 15
90201–167P7	13 – 3
90201–174L9	13 – 20
90201–20266	14 – 4
90201–20269	25 – 16
90201–20276	16 – 6
90206–06088	34 – 8
90206–19027	11 – 5
90208–07052	5 – 4
90209–10131	36 – 3
90215–14321	13 – 22
90249–12008	27 – 27
	28 – 11
90280–03017	2 – 9
90340–12059	5 – 7
90340–14810	10 – 7
90340–32812	10 – 9
90387–053Y7	21 – 23
90387–060G7	18 – 10
	19 – 3
	19 – 8
	19 – 20
	29 – 2
	29 – 7
90387–06500	18 – 15
90387–06676	21 – 24
90387–06681	17 – 11
	18 – 20
	19 – 15
	19 – 25
	21 – 11
90387–066M1	35 – 11
90387–06803	6 – 21
	18 – 3

PART NO. CODIGO Nº	REF. NO.
90387–06803	29 – 13
90387–084N8	23 – 6
90387–12879	26 – 32
90387–1503D	14 – 14
90387–167L5	4 – 7
90387–18880	26 – 33
90430–06014	4 – 17
	10 – 17
90445–08170	37 – 18
90460–43179	6 – 20
90465–08230	1 – 20
90465–10833	9 – 12
90467–07029	7 – 25
90467–10008	23 – 12
90467–11106	6 – 19
90467–13064	9 – 7
90468–12007	26 – 48
90468–23194	11 – 3
90480–01321	27 – 14
90480–10334	17 – 9
	19 – 16
	19 – 26
90480–12314	18 – 2
90480–13398	18 – 12
	19 – 4
	19 – 9
	19 – 21
	29 – 5
	29 – 10
	29 – 14
	35 – 12
90480–15397	21 – 25
90480–18476	23 – 5
90480–18881	35 – 9
90501–02639	12 – 8
90501–037J6	13 – 7
90501–06022	15 – 3
90501–10245	28 – 10
90501–125E9	16 – 16
90501–205E8	26 – 45
90501–217J8	13 – 18
90506–18288	25 – 11
	26 – 12
90506–20804	28 – 7
90506–20829	28 – 18
90506–29802	28 – 4
90508–263A8	11 – 8
90508–265A1	16 – 9

NUMERICAL INDEX
INDICE NUMERICO

PART NO. CODIGO Nº	REF. NO.
90508–295A0	16 – 4
90560–10292	25 – 3
90560–12145	26 – 3
90560–16385	13 – 1
90560–17328	13 – 21
90560–17384	13 – 12
91317–06010	12 – 9
91317–06012	4 – 6
	37 – 12
91317–06014	30 – 4
91317–06016	4 – 14
91317–06025	6 – 5
	6 – 6
	30 – 3
91401–20012	28 – 13
92901–06200	36 – 5
92903–06600	20 – 11
92907–05600	6 – 17
	20 – 9
	37 – 9
92907–06100	26 – 39
92907–06600	6 – 23
	18 – 5
	21 – 17
	23 – 15
	28 – 14
	36 – 15
	38 – 9
92907–08100	26 – 44
	27 – 3
92907–10200	27 – 12
92907–10600	20 – 18
	28 – 33
92907–12600	20 – 6
93101–10142	10 – 20
93102–12106	16 – 3
93102–15147	11 – 14
93102–20366	14 – 19
93105–47807	25 – 9
93106–20816	25 – 4
93106–30817	26 – 20
93210–06422	16 – 21
93210–10010	33 – 9
93210–14369	10 – 8
93210–19522	10 – 19
93210–22382	38 – 5
93210–25552	6 – 3
	6 – 4

PART NO. CODIGO Nº	REF. NO.
93210–32172	10 – 10
93210–41041	26 – 6
93210–44704	1 – 10
93210–568G8	1 – 18
93210–63556	1 – 7
93306–001Y1	14 – 9
93306–00210	4 – 4
93306–00308	4 – 3
93306–004XC	26 – 21
93306–20229	2 – 15
93306–20301	14 – 17
93306–203X8	14 – 8
93306–204Y6	14 – 18
93306–20595	2 – 8
93306–300Y6	25 – 5
93306–301Y8	26 – 5
93306–301Y9	26 – 4
93310–326M9	2 – 4
93340–21210	16 – 11
93410–20038	14 – 5
93430–12008	28 – 5
93440–10153	1 – 3
93440–15012	14 – 16
93450–14088	2 – 12
93501–04011	21 – 2
93503–16003	21 – 5
93604–10011	16 – 12
93606–10227	13 – 6
93608–43157	12 – 2
93608–50149	16 – 7
93610–10170	12 – 7
93822–15069	14 – 20
94122–17W07	25 – 23
94125–17W08	26 – 26
94222–17W02	25 – 24
	26 – 27
94322–17858	25 – 25
94325–17004	26 – 28
94412–17847	25 – 7
94414–17849	26 – 9
94580–24098	26 – 40
94680–24001	26 – 41
94700–00846	1 – 13
95027–06025	10 – 13
95027–06040	10 – 4
95027–06050	10 – 5
95027–06080	10 – 22
95027–06090	1 – 16

PART NO. CODIGO Nº	REF. NO.
95307–06600	25 – 20
	26 – 16
	26 – 37
95307–08700	26 – 47
	28 – 17
95307–10600	20 – 14
95317–06700	6 – 7
95607–06100	24 – 11
	28 – 25
	28 – 29
	36 – 12
95607–08200	17 – 4
95707–06500	8 – 9
	16 – 22
	24 – 13
	35 – 13
	38 – 11
95707–08500	8 – 7
	23 – 4
95707–12500	30 – 5
95807–06010	38 – 14
95807–06014	29 – 12
95807–08016	8 – 10
95827–06012	24 – 18
95827–06016	24 – 19
95827–08016	10 – 6
	28 – 20
97007–06012	21 – 16
	23 – 14
	34 – 6
97007–06016	37 – 2
97007–06020	18 – 9
	18 – 14
	23 – 3
	29 – 15
97007–06025	36 – 14
97007–08016	27 – 2
97017–06025	11 – 13
97027–06020	16 – 24
	18 – 4
97027–10020	28 – 32
97601–04012	7 – 5
97601–04014	7 – 7
97607–05216	38 – 6
97706–40016	32 – 4
	32 – 8
97706–40625	35 – 8
97707–40014	32 – 9

PART NO. CODIGO Nº	REF. NO.
97707–50014	27 – 13
97707–50016	27 – 11
	33 – 6
98504–06010	20 – 10
98506–05035	36 – 2
98506–05040	36 – 8
98506–06008	36 – 6
98507–05010	20 – 8
	37 – 8
98507–05030	6 – 16
98507–06016	1 – 8
	19 – 14
	19 – 24
	21 – 10
	38 – 8
98507–06020	6 – 22
98507–06040	9 – 11
98507–06060	9 – 10
98507–06080	9 – 9
98907–05010	21 – 15
98980–06008	8 – 4
99001–05600	5 – 3
99009–10400	15 – 8
99009–19400	11 – 7
99009–20400	16 – 5
99246–00080	19 – 35
99246–00120	19 – 32
	19 – 34
99530–10114	1 – 15
	9 – 4
	9 – 8
	10 – 3

PART NO. CODIGO Nº	REF. NO.

PART NO. CODIGO Nº	REF. NO.